MICRO CRYSTAL SWITZERLAND

CM9V-T1A

Tuning Fork Crystal 32.768 kHz

lead-free

RoHS COMPLIANT

DIMENSIONS

Package:

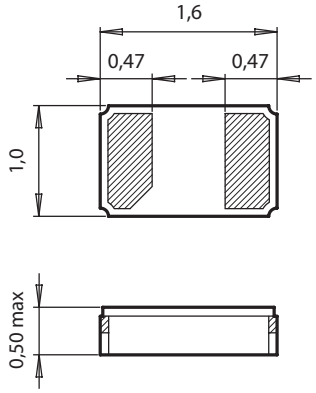

Recommended Solder Pad:

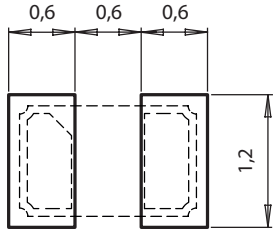

All dimensions in mm typical

APPLICATIONS

IoT
Metering
Industrial
Health Care
Ultra Small Devices
Wearables, Portables

DESCRIPTION

The CM9V-T1A is a low frequency SMT Quartz Crystal Unit that incorporates a tuning fork Quartz Crystal Resonator. It operates under vacuum in a hermetically sealed ceramic package with metal lid.

FEATURES

Ultra small size (1.6 × 1.0 × 0.5 mm).
Outstanding hermetic sealing with gold-tin preform.
High stability and low aging guaranteed by hermetic sealing.
Available for extended operating temperature range.
Lightweight (2.4 mg).
High shock and vibration resistant.
100% Pb-free, RoHS-compliant.

ELECTRICAL CHARACTERISTICS AT 25°C

Standard Frequency 1)	**F_L**	**32.768**	**kHz**
Load capacitance 2)	C_L	4.0 / 6.0 / 7.0 / 9.0 / 12.5	pF
Frequency tolerance 3)	$\Delta F/F$	±20	ppm
	$\Delta F/F$	±100	ppm
Series resistance typ./max.	R_S	70 / 90	kΩ
Motional capacitance typ.	C_1	6.3	fF
Static capacitance typ.	C_0	1.4	pF
Drive level max.	P	0.5	µW
Insulation resistance min.	R_i	500	MΩ
Aging first year max.	$\Delta F/F$	±3	ppm
Turnover temperature	T_0	25 ±5	°C
Frequency vs. temperature	$\Delta F/F_0$	$-0.035\ ^{ppm}/_{°C^2}\,(T - T_0)^2$ ±10%	ppm

1) Other frequencies on request.
2) Other load capacitances on request.
3) Tighter frequency tolerances on request.

STANDARD FREQUENCIES

Frequency
32.768 kHz
Other frequencies on request

ENVIRONMENTAL CHARACTERISTICS

		Conditions	Max. Dev.
Storage temp. range		–55 to +125°C	
TA Operating temperature range		–40 to +85°C	
TB Extended oper. temp. range		–40 to +125°C	
TC Extended oper. temp. range		–55 to +125°C	
Shock resistance	ΔF/F	5000 g, 0.3 ms, ½ sine	±5 ppm
Vibration resistance	ΔF/F	20 g / 10–2000 Hz	±5 ppm

TERMINATIONS AND PROCESSING

Type	Termination	Processing
CM9V-T1A	For SMT mounting Au flashed pads	IPC/JEDEC J-STD-020C 260°C / 20 - 40 s

ORDERING INFORMATION

C M 9 V - T 1 A 32.768 kHz 12.5 pF ±20 ppm TA QC

Ceramic package

Metal lid

Package size
9 = 1.6 x 1.0 x 0.5 mm

Tuning fork

SMT Package

Au flashed pads

Pads on both ends

Frequency F_L

Load capacitance C_L
4.0 pF, 6.0 pF
7.0 pF
9.0 pF
12.5 pF
Other C_L on request

Frequency tolerance
±20 ppm
±100 ppm
Tighter freq. tolerances on request

Temperature range
TA = -40 to +85°C (Standard)
TB = -40 to +125°C
TC = -55 to +125°C

Qualification
QC = Commercial Grade (Standard)

A unique part number will be generated for each product specification, i.e:	
20xxxx-MC01	1'000 pcs (in 8 mm tape on 7" reel)
20xxxx-MC03	3'000 pcs (in 8 mm tape on 7" reel)

All specifications subject to change without notice.

MICRO CRYSTAL SWITZERLAND
A COMPANY OF THE SWATCH GROUP

Micro Crystal AG
Muehlestrasse 14
CH-2540 Grenchen
Switzerland

Phone +41 32 655 82 82
Fax +41 32 655 82 83
sales@microcrystal.com
www.microcrystal.com

Mouser Electronics

Authorized Distributor

Click to View Pricing, Inventory, Delivery & Lifecycle Information:

Micro Crystal:

202257-MC01 202412-MC01 202416-MC01 202267-MC01 CM9V-T1A-32.768kHz-7pF-100PPM-TA-QC CM9V-T1A-32.768kHz-12.5pF-20PPM-TA-QC CM9V-T1A-32.768kHz-9pF-20PPM-TA-QC CM9V-T1A-32.768kHz-7pF-20PPM-TA-QC