SYMBOL DEFINITION		
A DIMENSION WITHOUT AN INSPECTION REPORT SYMBOL (□) DOES NOT REQUIRE INSPECTION. IT MAY BE CONTROLLED ON THE INDIVIDUAL COMPONENT DRAWING.	TOTAL NO OF INSPECTIONS REQUIRED	14
	LAST NO. USED	10

MISSING SYMBOLS
NO MISSING SYMBOL NUMBER

DWG STATUS					ZONE	REVISION HISTORY	AUTH	DR	APVD 1	APVD 2
DATE	STS	REV	N/P	CHG						
14JN02	R	D5	-	-		CLEARED REV COL, REVISED MAT'L SPEC & ADDED MAT'L RECYCLING CODE AND DELPHI LOGO NOTES	223718	BYP	BYP	ET
27NO02	R	D6	-	-		UPDATED PDM ATTRIBUTES	213878	RVP	RVP	RC
04FE03	R	D7	-	-		UPDATED PDM ATTRIBUTES	236503	KGP	KGP	RC
25MR03	R	D8	-	-		UPDATED PDM ATTRIBUTES	238820	DRB	DRB	RC

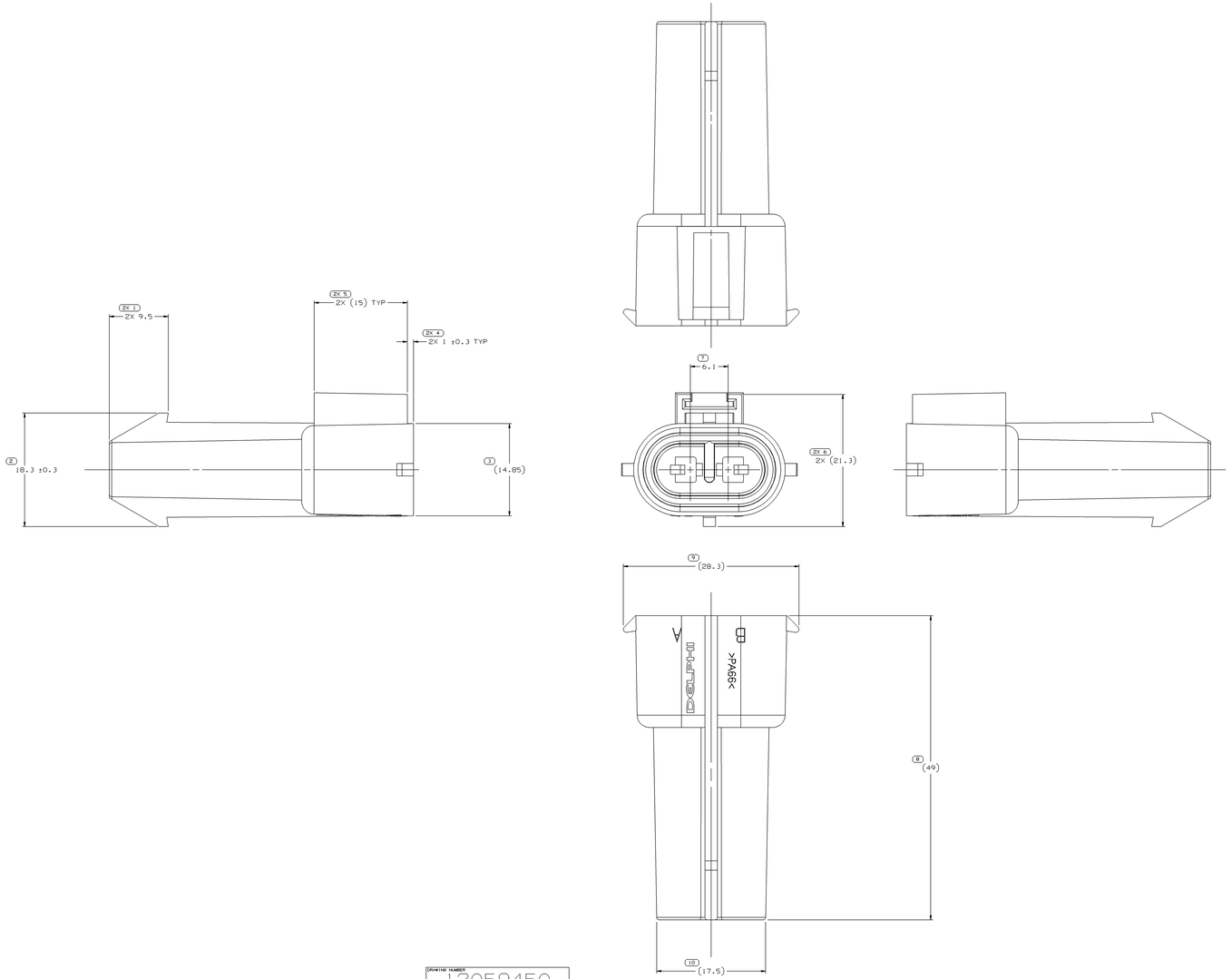

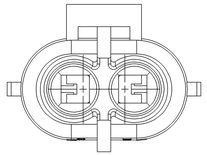

NOTES

1. UNLESS OTHERWISE SPECIFIED AND/OR INDICATED:
   DIMENSIONS ARE TO FACE OF VIEW SHOWN AND AUTOMATICALLY ROUNDED BY COMPUTER FOR INSPECTION (SEE MATH MODEL FOR PRECISE DIMENSIONS). FOR ALL OTHER DIMENSIONS NOT SHOWN BUT REQUIRED FOR TOOL BUILD, SEE MATH MODEL FOR PRECISE TOOL PATH DATA.

2. MATERIAL RECYCLING CODE >PA66< PER SAE J1344. (2.3)X(0.1) RAISED CHARACTERS AS SHOWN TO BE LOCATED ON ANY EXTERIOR SURFACE. OPTIONAL CONSTRUCTION TO BE NO MATERIAL RECYCLING CODE.

3. THIS PART ACCEPTS THE FOLLOWING COMPONENTS OR EQUIVALENT:
   CONNECTOR 12020809
   TERMINAL 12040559
   SECONDARY TERMINAL LOCK 12025679
   SEALING CODE 3

4. (2.3)X(0.1) RAISED DELPHI CORPORATE BRAND TO BE LOCATED ON ANY EXTERIOR SURFACE, PREFERABLY VISIBLE AT FINAL ASSEMBLY. OPTIONAL CONSTRUCTION TO BE "FED" OR NO LOGO.

2	PROCESS SENSITIVE DIMENSION
	DIMENSION ENCLOSED IN A PARENTHESIS REFERENCE DIMENSIONS AND NO TOLERANCE LIMITS ARE ESTABLISHED
REFERENCE	

R 0.2 MAX

R 0.1 MAX

SHARP CORNER TOLERANCE

DIMENSIONAL RANGE (MM)								
FROM	0	>6	>10	>30	>100	>200	>300	>400
TO	6	10	30	100	200	300	400	500
TOLERANCE UNLESS OTHERWISE SPECIFIED								
±0.15	±0.2	±0.3	±0.4	±0.5	±0.6	±1	±1.2	±2
ANGULAR TOLERANCE ±2°								

THIRD ANGLE PROJECTION

DO NOT SCALE

USE MATH DATA

PART TYPE	PART DRAWING
STYLE	
VOLUME (CM³) 6.419	DISTR CODE
MASS (G) 6.900	

UNLESS OTHERWISE SPECIFIED

THIS DOCUMENT IS IN ACCORDANCE WITH ASME Y14.5M-1994 UNLESS OTHERWISE SPECIFIED. DIMENSIONS ARE TO TOLERANCE MINIMUM + (PM). ALL GEOMETRIC TOLERANCES AND RELATED DATUMS APPLY WITH - RULE #1(PERFECT FORM AT MMC) UNLESS OTHERWISE SPECIFIED. ALL GEOMETRIC TOLERANCES TO BE ESTABLISHED BY INDICATION OR LOCATION TOLERANCES. DEVIATIONS FROM THE GIVEN DATA MUST BE MADE SEPARATELY, REFER TO DELPHI PDM DATA.
ALL DIMENSIONS ARE IN MILLIMETERS

DELPHI

DELPHI PACKARD ELECTRIC SYSTEMS
WARREN

	DATE
APVD1 ANDY T. LE	30OCT05
APVD2 F. HESTON	13NOV05
APVD3 D. BARTLEY	15NOV05
APVD4	
APVD5	

SUBSTANCES OF CONCERN AND RECYCLED CONTENT PER DELPHI 10949001

MATERIAL
M39/2001 PA66 HS IM BLK

DRAWING NAME
CONN 2 M M/P 280 BLK SEALED

DRAWING NUMBER
12059450

SIZE	SCALE	FRAME NO	SHEET NO	STS	REV	N/P
A1x3	4:1	1 OF 2	1 OF 1	R	DB	-

DRAWING NUMBER
12059450

SIZE	SCALE	FRAME NO	SHEET NO	STS	REV	N/P
A1x3	4:1	2 OF 2	1 OF 1	R	DB	-

12059450

Mouser Electronics

Authorized Distributor

Click to View Pricing, Inventory, Delivery & Lifecycle Information:

Aptiv:
12059450