ROHS COMPLIANT

PRODUCT DATA DRAWING

REVISION HISTORY			
REV	DESCRIPTION	DATE	APPROVED
F	DCN 47710	07/18	STW

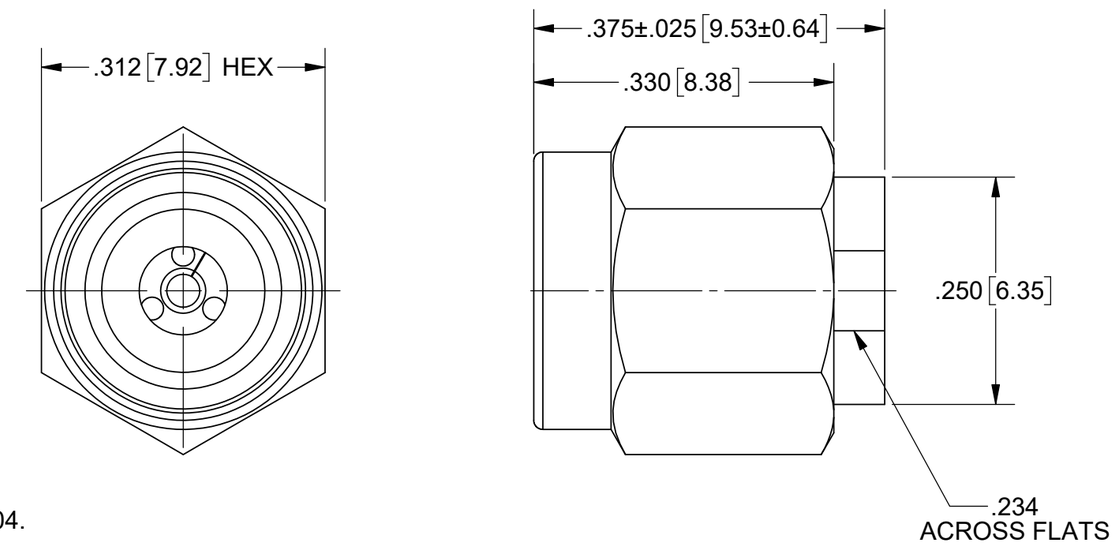

MATERIAL:

BODY, PRESS CAP & COUPLING NUT: STAINLESS STEEL PER AMS-5640, ALLOY UNS S30300, TYPE 1 OR ASTM A582, TYPE 303, CONSITION A.

LOCK RING & CONTACT: BERYLLIUM COPPER PER ASTM B196, ALLOY No. UNS C17300, TD04.

SLEEVE: BRASS PER ASTM B16, ALLOY UNS No. C36000.

INSULATOR: PEI (ULTEM 1000) PER ASTM D5205.

GASKET: FKM FLUOROCARBON (VITON) PER AMS 3216.

BELLOWS SPRING: ELECTRO-DEPOSITED NICKEL: GOLD PLATED

RESISTOR ELEMENT: ALUMINUM NITRIDE SUBSTRATE WITH TANTALUM NITRIDE RESISTOR & GOLD PLATED TERMINATIONS.

FINISH:

BODY, PRESS CAP & COUPLING NUT: PASSIVATED PER AMS-2700.

CONTACT: GOLD PER MIL-DTL-45204, TYPE I, GRADE C, CLASS 1 (.00005" MIN) OVER NICKEL PER SAE AMS 2404, CLASS 1, .00005" MIN.

CHIP SLEEVE: GOLD PER ASTM B488, TYPE II, CODE C, CLASS 1.27 (.00005" MIN.) OVER NICKEL PER AMS-QQ-N-290, CLASS 1, .00005" MIN.

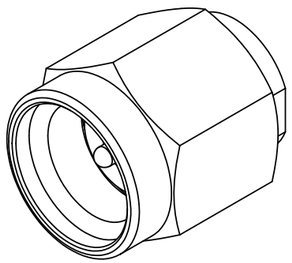

PERFORMANCE:

IMPEDANCE: 50 OHMS
FREQ. RANGE: DC TO 40.0 GHz
VSWR: 1.25:1 MAX., DC TO 40.0 GHz
OPERATING TEMP.: -55°C TO +135°C
AVG. POWER: 2 WATT (POWWER INPUT DERATED LINEARLY FROM 25°C TO .2 WATTS AT 125°C)

MATERIAL: SEE NOTES
FINISH: SEE NOTES
SURFACE AREA: N/A

PROPRIETARY

THE INFORMATION CONTAINED IN THIS DRAWING IS THE SOLE PROPERTY OF SV MICROWAVE, INC. ANY REPRODUCTION IN PART OR AS A WHOLE WITHOUT THE WRITTEN PERMISSION OF SV MICROWAVE, INC IS PROHIBITED.

DIMENSIONS ARE IN INCHES TOLERANCES:
FRACTIONAL: ±1/64 ANGULAR: X° ±1°0' X°X' ±15'
DECIMAL: .X ±.030 .XX ±.010 .XXX ±.005

INTERPRET DIMENSIONS AND TOLERANCES PER ASME Y14.5M - 1994

THIRD ANGLE PROJECTION

UNLESS OTHERWISE SPECIFIED
1) ALL DIMENSIONS ARE IN INCHES [MILLIMETERS]
2) ALL DIMENSIONS ARE AFTER PLATING.
3) BREAK CORNERS & EDGES .005 R. MAX.
4) CHAM. 1ST & LAST THREADS.
5) SURFACE ROUGHNESS 63 MIL-STD-10.
6) DIA.'S ON COMMON CENTERS TO BE CONCENTRIC WITHIN .005 T.I.R.
7) REMOVE ALL BURRS

DRAWN:	BRT	09/13/02
CHECKED:	DWC	06/06/01
APPROVED:	DWC	06/06/01

SV Microwave, Inc.
2400 Centrepark West Drive, Suite 100
West Palm Beach, FL 33409

TITLE: SVK PLUG TERMINATION DC-40.0 GHz

SIZE B | CAGE CODE 95077 | DWG. NO. SF8015-6002

SCALE: 6:1 | SHEET 1 OF 1

Mouser Electronics

Authorized Distributor

Click to View Pricing, Inventory, Delivery & Lifecycle Information:

Amphenol:
SF8015-6002