NEW

0.4mm pitch Board to Board connector

WA6 Series

CONNECTOR
MB-0136-2
July 2006

RoHS Compliant

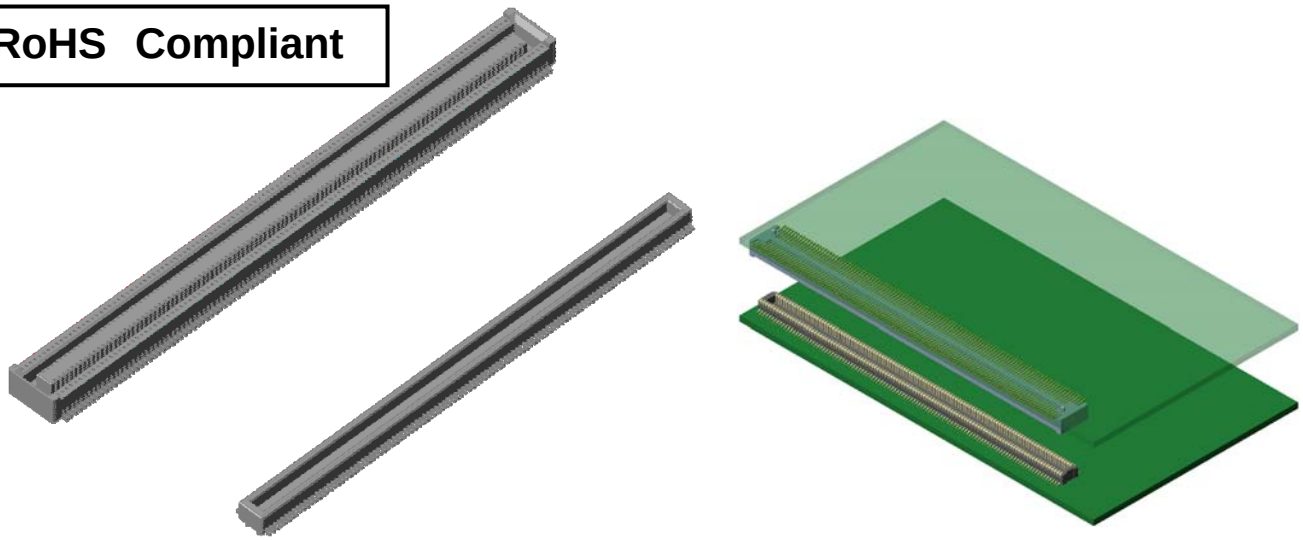

< Outline >
The WA6 Series are 0.4mm pitch high density, compact connectors adapted to SMT, for board to board (parallel board) connection with connector warpage prevention feature, industry leading high pin counts, 214 position has been developed.
Low profile connector with 3 mm stacking height saves mounting space as much as possible. WA6 has been employed as JEDEC standard for compact notebook PC memory modules(214 pos., DDR2, Micro-DIMM). Best suits for high density mounting and multi-pole interconnection of TVs and PCs interior mounting.

Features

- ■Parallel board stacking height 3mm type low-profile design, No. of contacts: 214 pos.
- ■Coplanarity of terminal portion held under 0.1mm.
- ■Contacts for solder reinforcement are provided in each corner of the connector. (2 contacts x 4 corners, total 8 contacts)
- ■Contact wiping length is 0.6mm.
- ■Prevents solder wicking by integrated molding technology of contact and resin mold.(Plug)
- ■Compatible to automatic mounting
  Both plug and receptacle have enough absorption surface for automatic mounting.
  Products with kapton tape are available.
  Available in embossed tape (width of tape; plug side: 56mm, receptacle side: 72mm)
  Also available with and without a positioning boss, that secures correct positioning when mounting.
- ■No polar characteristics are applied to this connector.

General Specifications

- ■No. of contacts :214 pos.
- ■Contact resistance: 70m ohm max.
- ■Dielectric withstanding voltage :
  AC500Vr. m.s per minute
- ■Operating temperature:
  -55 Deg C to +85 Deg. C
- ■Rated current: AC, DC each 0.3A/ per pin
- ■Rated voltage: AC200CV
- ■Insulation resistance: 100M ohm min.
- ■Contact pitch: 0.4mm

JAE PMK Div. Proprietary. Copyright © 2006, Japan Aviation Electronics Industry, Ltd.

Materials and Finishes

WA6F214VA1T (Receptacle side)

Components	Materials /Finishes
Contact	Copper alloy/ Contact area: Au Terminal area: Au flash
Reinforced soldering contacts	Copper alloy/ Terminal area: Au flash
Insulator	Heat resistant plastic/ none
Heat resistant tape	Polyimide/ none

WA6M214VA1T (Plug side)

Components	Materials /Finishes
Contact	Copper alloy/ Contact area: Au Terminal portion: Au flash
Reinforced soldering contacts	Copper alloy/ Terminal area: Au flash
Insulator	Heat resistant plastic/ none
Heat resistant tape	Polyimide/ none

Cautions for Handling

■Please refer to Handling Instructions (JAHL-10196) when using the connector.

■The insertion force will be 9kg (214 pos.)
When mating, in order to prevent problems from adding excessive stress to the connector, please reinforce the back side of the receptacle.

■No polar characteristics are applied to this connector.

■It is advised to take mechanical countermeasures as bolting to prevent connector coming off during drop test etc.

■Please refer to JEDEC specification MO-260B, SO-004A, when using as a memory module connection.

JAE PMK Div. Proprietary. Copyright © 2006, Japan Aviation Electronics Industry, Ltd.

Ordering Information

WA6F ** V A 1 T

- WA6F: Series name
- F: Connector type, F: Receptacle side with boss
- **: No. of contacts: 214 pos.
- V: Configuration of connection: Straight type, with exclusive reinforced soldering
- A: Contact portion plating: Au
- 1: Mating height 3mm
- T: T: Absorption(heat resistant) with tape

Part number	WA6F214VA1T
SJ Drawing	SJ101337
Specifications	JACS-10196

Ordering Information

WA6M ** V A 1 T

- WA6M: Series name
- M: Connector type, M: Plug side with boss
- **: No. of contacts: 214 pos.
- V: Configuration of connection: Straight type, with exclusive reinforced soldering
- A: Contact portion plating: Au
- 1: Mating height 3mm
- T: T: Absorption(heat resistant) with tape

Part number	WA6M214VA1T
SJ Drawing	SJ101335
Specifications	JACS-10196

Embossed tape packaging

■ Embossed reel type has packages containing 1800 pieces and 500 pieces.

WA6F ** V A 1 T R1800

- R1800: R: Embossed tape packaging amount: 1800 pcs., 500pcs.

Part number	WA6F214VA1TR1800	WA6F214VA1TR500
SJ Drawing	SJ101338	SJ103857

Part number	WA6M214VA1TR1800	WA6M214VA1TR500
SJ Drawing	SJ101336	SJ1014495

JAE PMK Div. Proprietary. Copyright © 2006, Japan Aviation Electronics Industry, Ltd.

Outer Dimensions

WA6F214VA1T

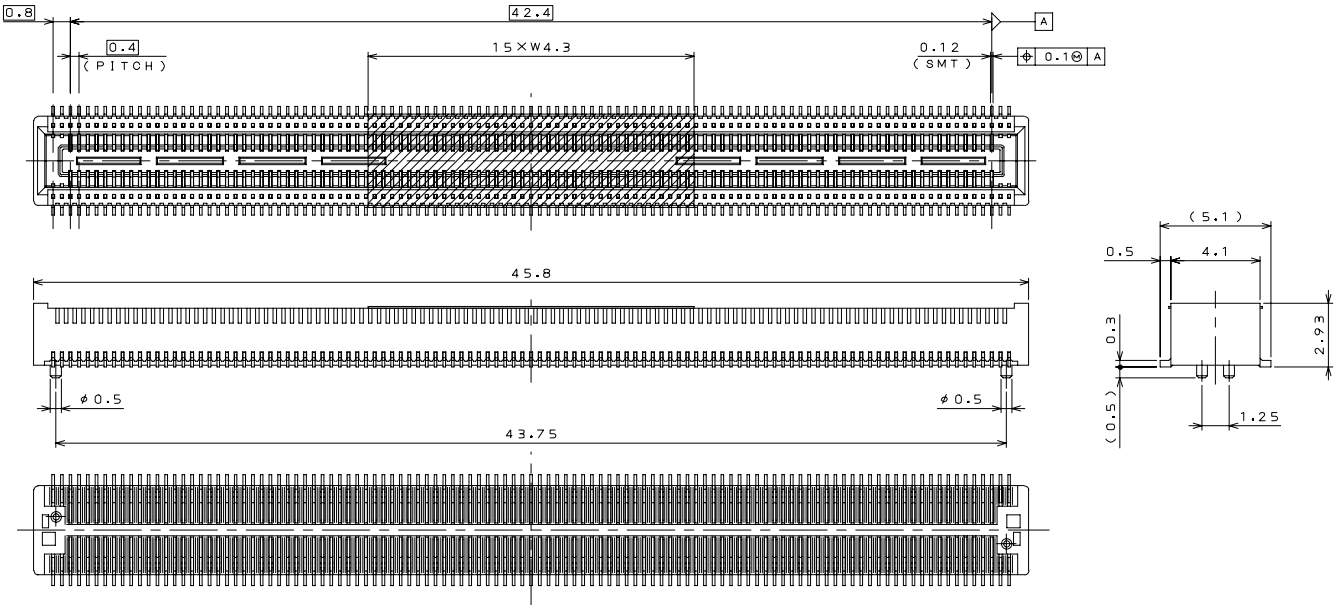

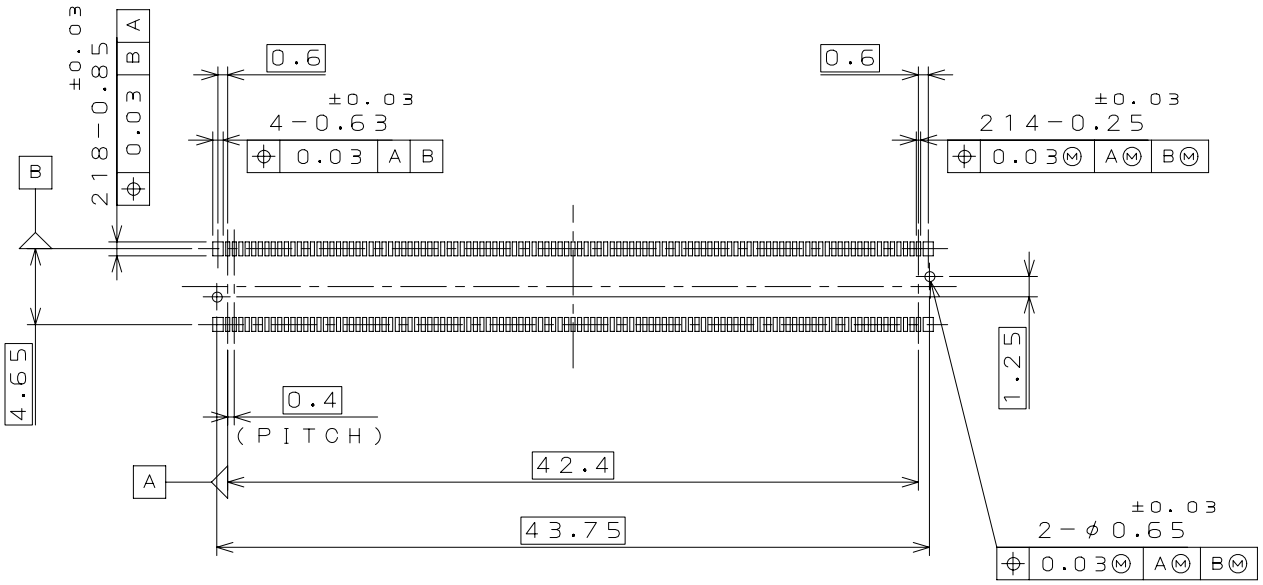

Applicable P.C.B dimension (for reference)

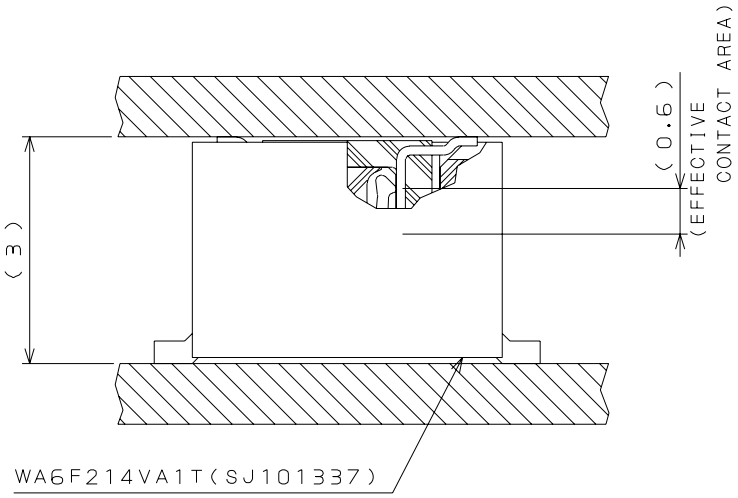

JAE PMK Div. Proprietary. Copyright © 2006, Japan Aviation Electronics Industry, Ltd.

Outer Dimensions

WA6M214VA1T

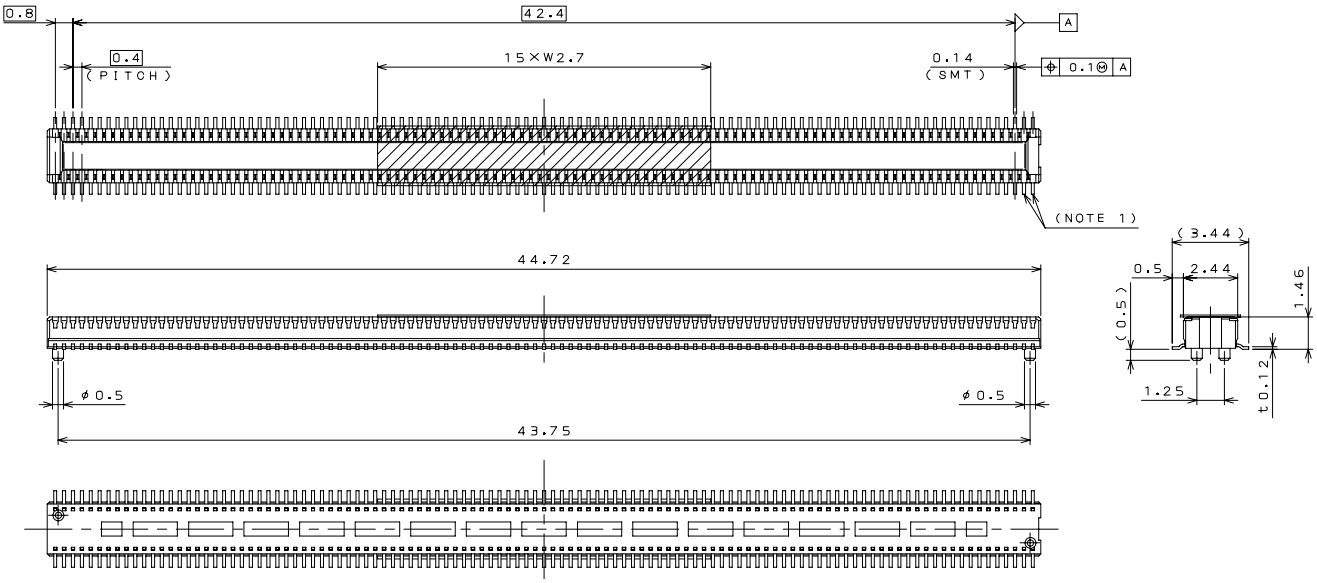

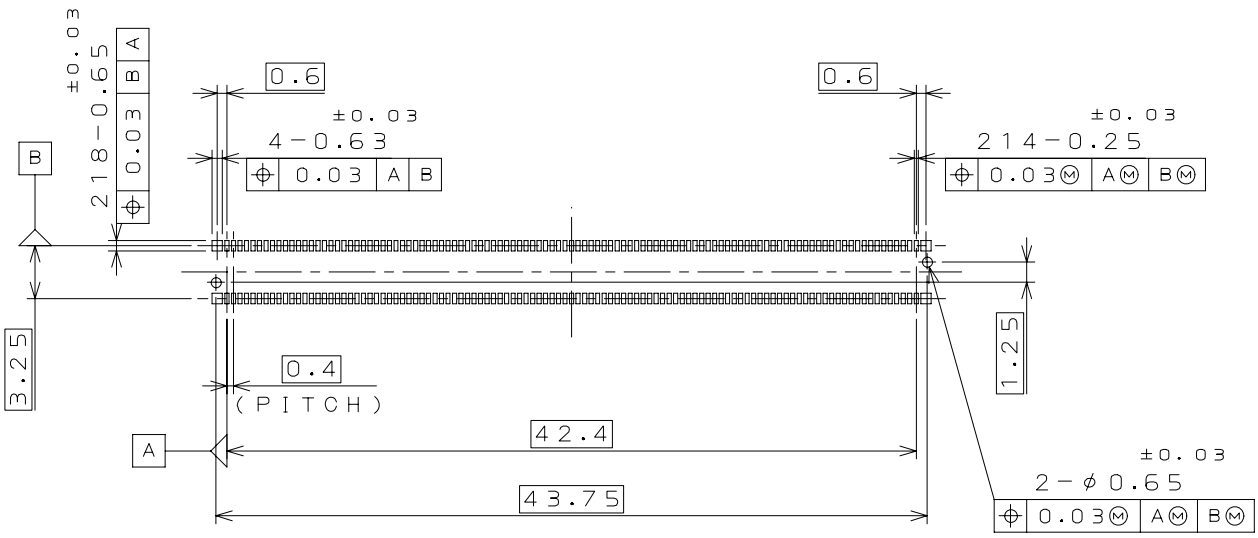

Applicable P.C.B dimension (for reference)

Notice: Products shown in this leaflet are made for the applications listed below. However, if the above-mentioned products are to be used in aerospace devices, marine cable-connection devices, atomic power control systems, medical equipment for life-support systems, or any other specific application requiring extremely high reliability, please contact JAE for further information.
Recommended applications: computers, office machines, measuring devices, telecommunication devices (terminals, mobile devices), AV devices, household applications, FA devices, etc.

Japan Aviation Electronics Industry, Limited

Product Marketing Division
Aobadai Building, 3-1-19, Aobadai, Meguro-ku, Tokyo 153-8539
Phone: +81-3-3780-2787 FAX: +81-3-3780-2946

* The specifications in this brochure are subject to change without notice. Please contact JAE for information.
JAE PMK Div. Proprietary. Copyright © 2006, Japan Aviation Electronics Industry, Ltd.

Mouser Electronics

Authorized Distributor

Click to View Pricing, Inventory, Delivery & Lifecycle Information:

JAE Electronics:
WA6M214VA1TR500