KYCON, Inc. 1810 Little Orchard Street, San Jose, CA 95125 (408)494-0330

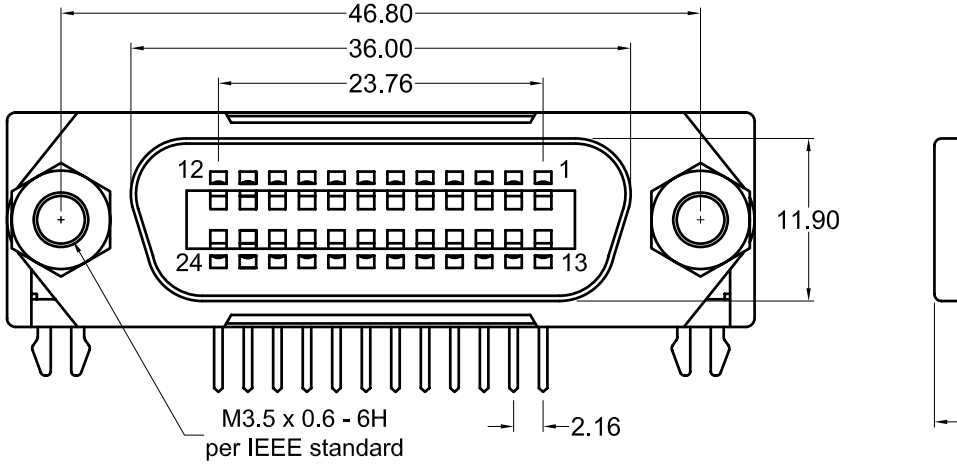

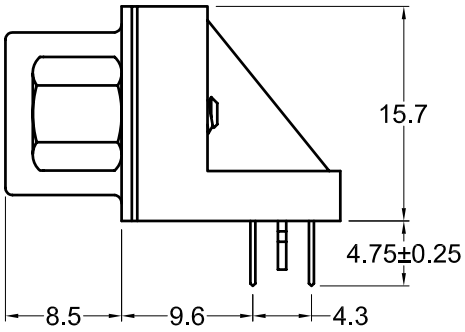

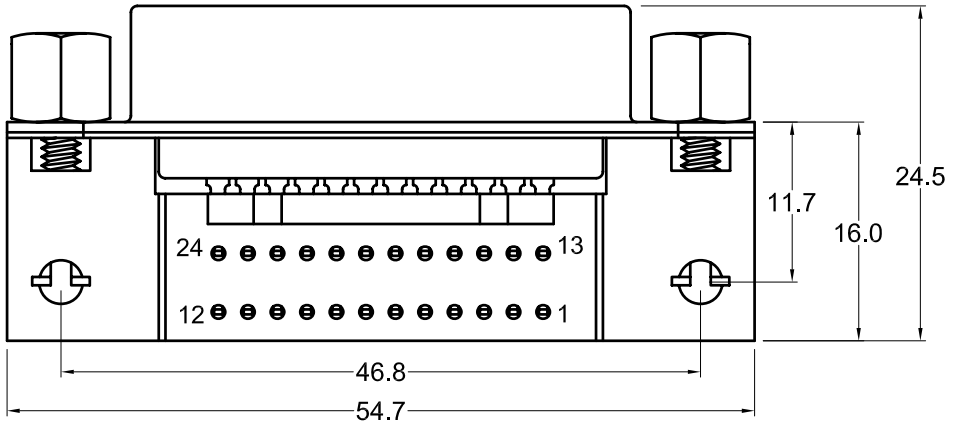

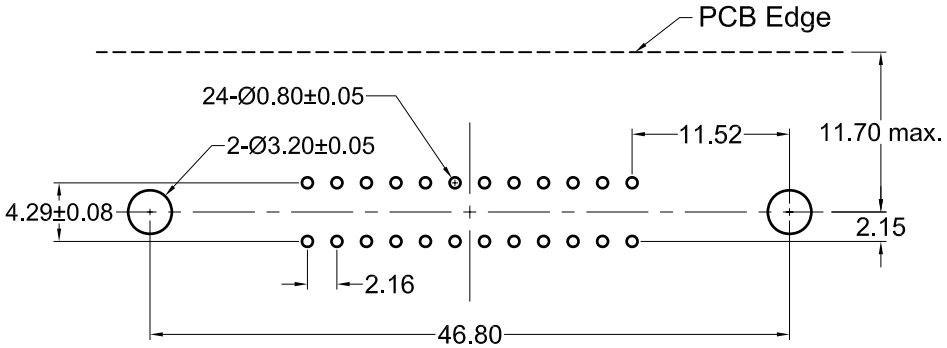

Recommended PCB Layout

Materials and Finish

Shell: Steel, nickel finish

Insert:
PBT Thermoplastic, Blue,
30% Glass Filled,
Self-Extinguishing,
UL94V-0 rated

Contact Material:
Phosphor Bronze

Contact Finish:
Gold Flash over 0.0001
(0.00254) Nickel

Mechanical Charateristics

Insertion and Withdrawal Force:
Insertion Force: 4.6kg
Withdrawal Force: 4.3kg

Durability:
Subjected to 500 Cycles of Insertions and Withdrawals, After Test, Connectors Meet the Max. Contact Resistance Specifications

Electrical Charateristics

Contact Current Rating: 1A

Dielectric Withstanding Voltage:
1000 V AC min.

Insulation Resistance:
1000 Megohms min.

Operating Temperature:
-55°C to +105°C

RoHS COMPLIANT
EU Directive 2002/95/EC

C US
LR78160

Tolerances
X.X ± 0.25
X.XX ± 0.15
Unless Stated Otherwise

REV.	DATE	DESCRIPTION	REV. BY	CHK. BY	DRAWN BY	DATE
A1	9/6/06	New Drawing	H. MA	C.Furumasu	H. MA	9/6/06
A2	03/13/08	ECO # 07-050	S. Vien	H. Ma		
					UNITS	
					mm	

37X-92240-24-XJM

Right Angle PCB Mount Miniature Ribbon Connector, RoHS Compliant

24 pos. socket, grounding brackets, metric jackscrews, no spring latches

KYCON

Mouser Electronics

Authorized Distributor

Click to View Pricing, Inventory, Delivery & Lifecycle Information:

Kycon:
37X-92240-24-XJM