THIS DRAWING IS UNPUBLISHED. RELEASED FOR PUBLICATION – ,N/A .
© COPYRIGHT N/A By – ALL RIGHTS RESERVED.

REVISIONS

P	LTR	DESCRIPTION	DATE	DWN	APVD
	AD	REVISED PER ECO-20-000269	1-7-19	CT	DM

1. THIS PLUG WILL MATE WITH ANY 11C1, SIZE 2 RECEPTACLE IN AMPLIMITE SERIES.
2. MAXIMUM WIRE INSULATION TO BE USED WITH THIS PLUG IS ø.068.
3. THIS CONNECTOR ACCEPTS (1) POWER 8, OR COAX PIN CONTACT IN POSITIONS A1, PURCHASED SEPARATELY.
4. THIS CONNECTOR ACCEPTS SIZE 20 PIN CONTACTS IN POSITIONS 1 THRU 32. PURCHASED SEPARATELY.

5. STEEL PER ASTM-A-109.
6. BRASS PER MIL-C-50 AND ASTM-B-36 UNS NO. C26000.
7. CADMIUM PLATED PER QQ-P-416.
8. GOLD PLATED PER MIL-G-45204 TYPE II, GRADE C, CLASS 1 OVER COPPER PER MIL-C-14550, CLASS IV.
9. FINISH: TIN PER ASTM-B-545 .000400 MIN THK OVER COPPER PER AMS2418 .000050 MIN THK.
10. FRONT SHELL HAS GROUNDING INDENTS FOR 211111-4, 211111-6, & 5-211111-4 ONLY.
11. FINISH: ZINC PLATE PER ASTM-B-633 .000200-.000400 THK WITH SUPPLEMENTARY CHROMATE (Cr3+).

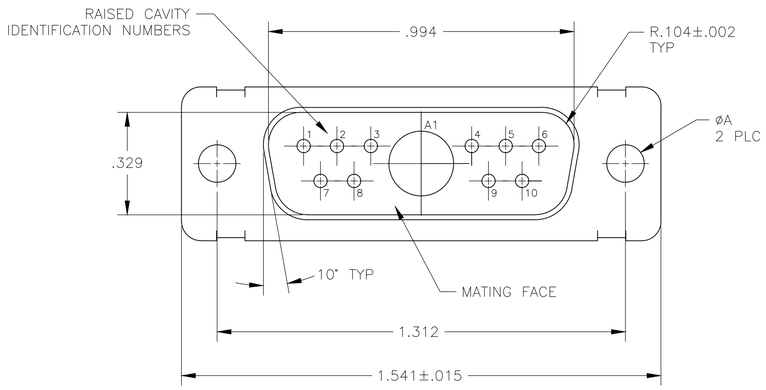

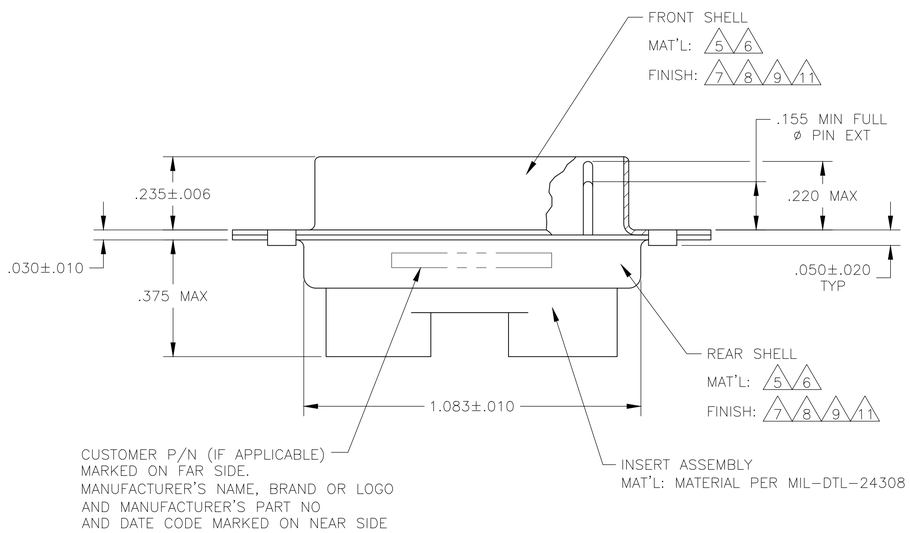

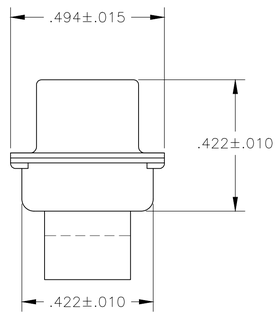

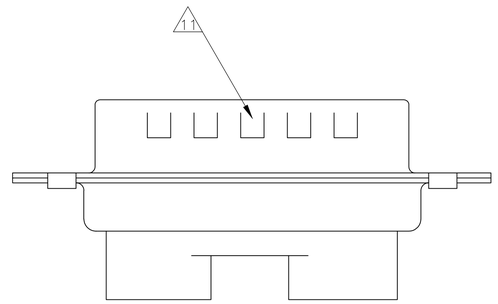

5 10 9	.120	–	5-211111-4
5 11	.120	–	5-211111-1
5 9	.120	–	211111-7
5 10 9	.120	–	211111-6
6 8	.120	B010942-0037	211111-5
5 9 10	.120	–	211111-4
6 8	.154	311P405-9P-B-15	211111-3
6 8	.120	311P405-9P-B-12	211111-2
5 7	.120	–	211111-1
REMARKS	ØA	CUSTOMER PART NO.	MFG'S PART NO.

THIS DRAWING IS A CONTROLLED DOCUMENT.

DIMENSIONS: INCHES

TOLERANCES UNLESS OTHERWISE SPECIFIED:
0 PLC ± –
1 PLC ± –
2 PLC ± –
3 PLC ± .005[0.13]
4 PLC ± –
ANGLES ± 0°30'

MATERIAL –
FINISH –

DWN 27-May-15 MANJUNATH G M
CHK 27-May-15 CHARLES THOMAS
APVD 27-May-15 CHARLES THOMAS
PRODUCT SPEC –
APPLICATION SPEC –
WEIGHT 0.000000

TE Connectivity

NAME
PLUG ASSEMBLY
AMPLIMITE 11C1
SIZE 2, SERIES 109, COAX MIX

SIZE	CAGE CODE	DRAWING NO	RESTRICTED TO
A1	00779	C-211111	–

CUSTOMER DRAWING | SCALE 4:1 | SHEET 1 OF 1 | REV AD

Mouser Electronics

Authorized Distributor

Click to View Pricing, Inventory, Delivery & Lifecycle Information:

TE Connectivity:

5-211111-1