© 2021 TE Connectivity. All Rights Reserved.

REVISIONS

P	LTR	DESCRIPTION	DATE	DWN	APVD
	F1	TYPO CORRECTIONS PER ECR-21-104935	14JUN2021	AFK	LS

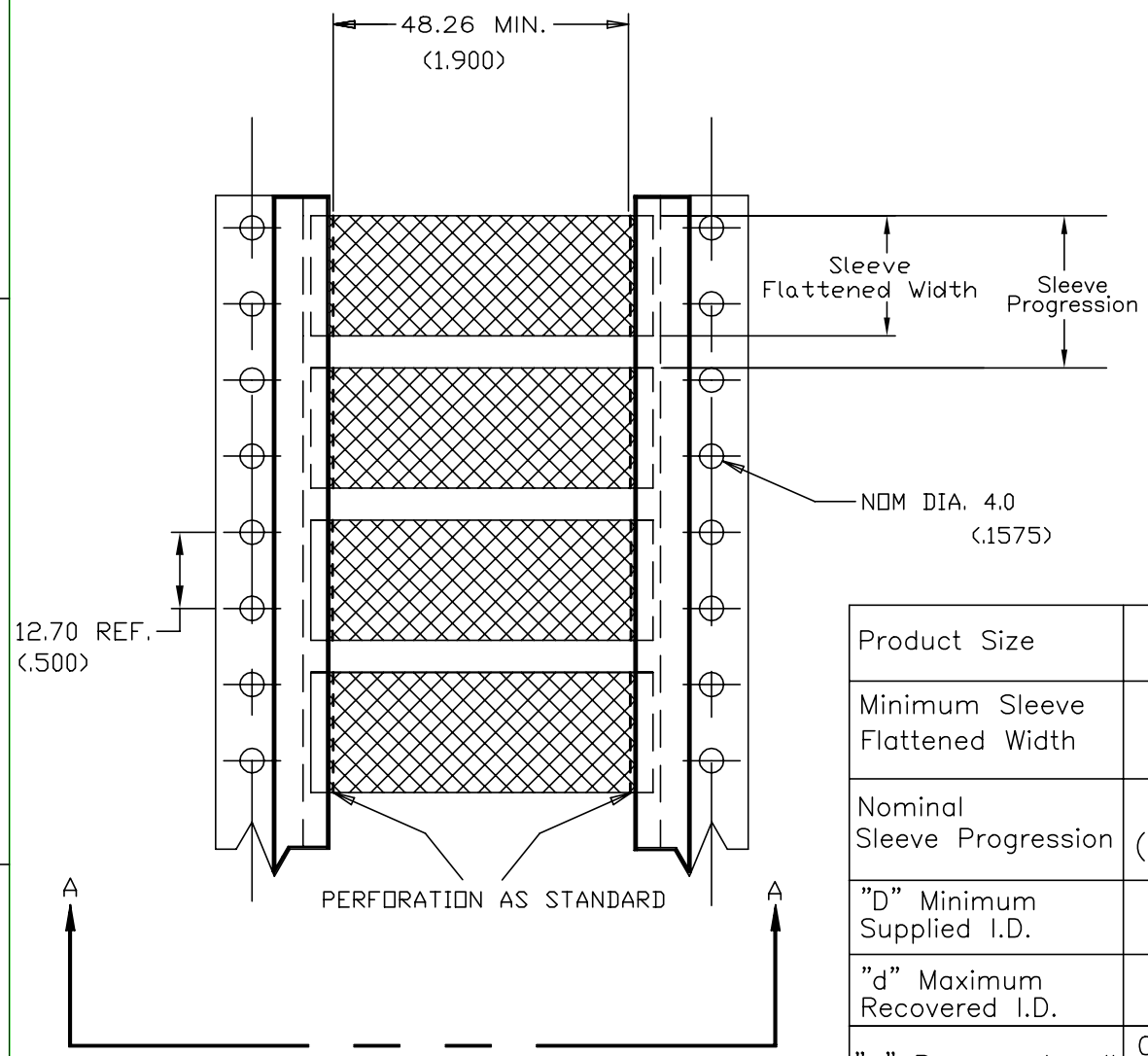

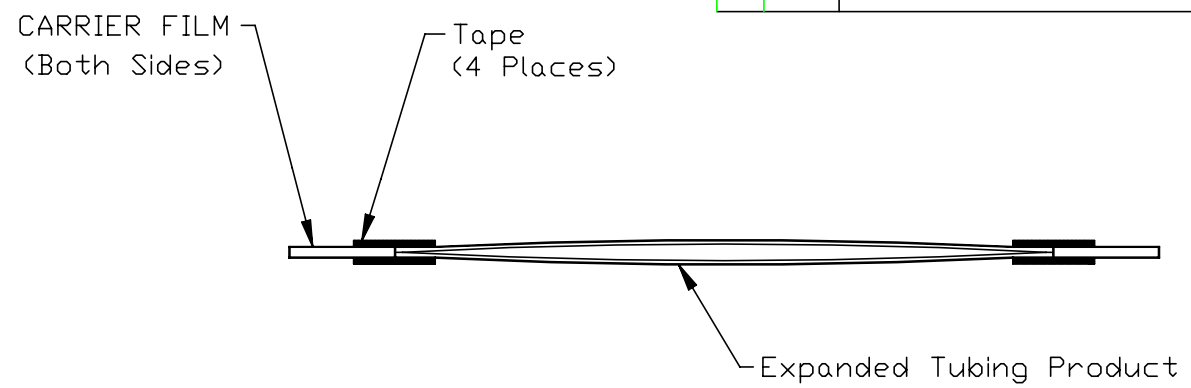

SECTION A - A

Product Size	2.4	3.2	4.8	6.4	9.5	12.7	19.0	25.4	38.1
Minimum Sleeve Flattened Width	4.3 (.169)	6.5 (.256)	8.9 (.350)	11.0 (.433)	15.7 (.618)	20.7 (.815)	30.7 (1.209)	41.1 (1.618)	61.0 (2.402)
Nominal Sleeve Progression	12.70 (.500)	12.70 (.500)	12.70 (.500)	16.94 (.667)	25.40 (1.000)	29.64 (1.167)	42.34 (1.667)	50.80 (2.00)	72.0 (2.835)
"D" Minimum Supplied I.D.	2.40 (.094)	3.20 (.125)	4.80 (.189)	6.40 (.250)	9.50 (.375)	12.7 (.500)	19.0 (.750)	25.4 (1.00)	38.1 (1.50)
"d" Maximum Recovered I.D.	1.19 (.047)	1.60 (.063)	2.40 (.094)	3.20 (.126)	4.80 (.189)	6.40 (.250)	9.50 (.375)	12.7 (.500)	19.1 (.750)
"w" Recovered wall	0.50±0.10 (.020±.004)	0.50±0.10 (.020±.004)	0.51±0.11 (.020±.004)	0.65±0.15 (.026±.006)	0.65±0.15 (.026±.006)	0.65±0.15 (.026±.006)	0.75±0.15 (.030±.006)	0.90±0.15 (.035±.006)	1.00±0.20 (.039±.008)

DIMENSIONS IN mm (inches)

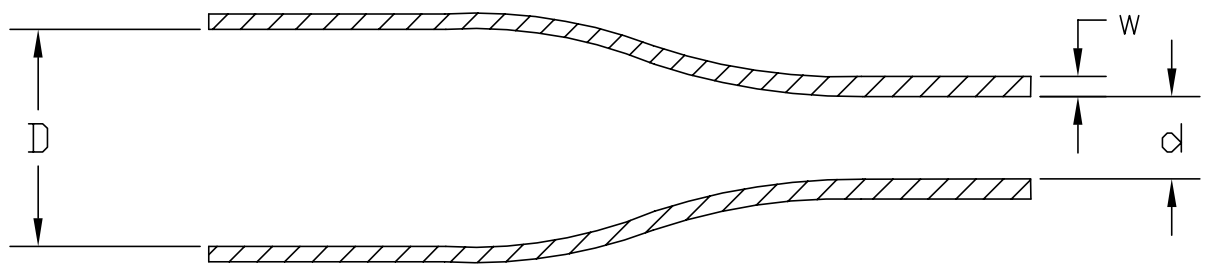

THIS DRAWING IS A CONTROLLED DOCUMENT.

DIMENSIONS: mm

TOLERANCES UNLESS OTHERWISE SPECIFIED:
0 PLC ± –
1 PLC ± –
2 PLC ± –
3 PLC ± –
4 PLC ± –
ANGLES ± –

MATERIAL: CROSSLINKED POLYOLEFIN

FINISH: –

DWN AFK 12FEB2020
CHK – –
APVD LS 12FEB2020
PRODUCT SPEC RW-2072
APPLICATION SPEC 411-121008
WEIGHT VARIOUS

TE Connectivity

NAME HX-SCE – –

SIZE	CAGE CODE	DRAWING NO	RESTRICTED TO
A3	0198G	C-MCD190000	–

CUSTOMER DRAWING

SCALE NTS | SHEET 1 OF 1 | REV F1

1470-19 (1/15)

Mouser Electronics

Authorized Distributor

Click to View Pricing, Inventory, Delivery & Lifecycle Information:

TE Connectivity:

C55984-000