THIS DRAWING IS UNPUBLISHED. RELEASED FOR PUBLICATION 2006
© COPYRIGHT 2006 - ALL RIGHTS RESERVED.

LOC	DIST
B1	-

REVISIONS

P	LTR	DESCRIPTION	DATE	DWN	APVD
	C3	REVISED PER ECO-11-005150	31MAR2011	RK	HMR
	C4	ECR-11-021594	11NOV2011	RK	MKO
	C5	ECR-14-007793	25AUG2014	RK	MKO
	C6	REVISED PER ECR-16-016780	19AUG2017	NG	MKO

WIRE CROSS-SECTION:
Ø6mm²- 16mm²

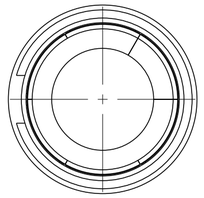

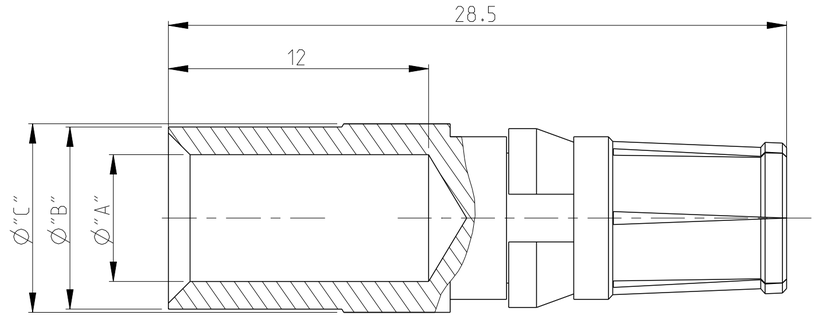

WIRE CROSS-SECTION:
Ø2.5mm²/ 4mm²

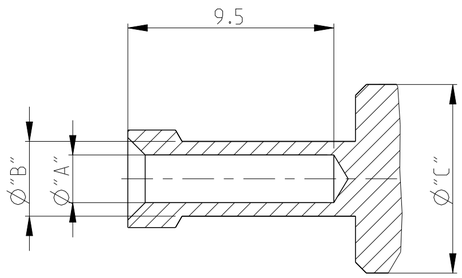

Notes

1. MATERIAL: BRASS
2. FINISH SILVER PLATING: 2 µm Ag MIN. OVER Cu
3. FINISH GOLD PLATING: 0.75 µm Au MIN. OVER Ni
4. WEIGHT (MAX.): 6.44 g, VOLUME (MAX.): 795mm² (APPROX.)
5. SUITABLE PIN CONTACT: CUSTOMER DRAWING 1105150
6. SUITABLE INSERTS: SERIES HSS, CUSTOMER DRAWING
7. SUITABLE CRIMP TOOL: PN 1-1105850-8
8. SUITABLE INSERTION TOOL: -
9. SUITABLE EXTRACTION TOOL: PN 0-1102855-5
10. FINE WIRE DIA. MAX. Ø4.5
11. STANDARDS: DIN EN 61984, DIN EN 60664-1
12. PACKAGING: 25 PIECES IN A POLY-BAG
13. PACKAGING: 1 PIECE LOOSE

	ORDERING TEXT	PLATING	CROSS SECTION	DIMENSIONS "A"	DIMENSIONS "B"	DIMENSIONS "C"	STRIPPING-LENGTH	WITH CLIP (12)	WITH CLIP (13)
OBSOLETE	HSS-C-Bu.Au.16.0 mm²	GOLD	16.0	5.85	8.4	8.7	12	~~5-2~~	9-3
	HSS-C-Bu.Au.10.0 mm²	GOLD	10.0	4.35	5.9	8.7	12	4-2	9-2
	HSS-C-Bu.Au.6.0 mm²	GOLD	6.0	3.5	4.9	8.7	12	3-2	9-1
	HSS-C-Bu.Ag.25.0 mm²	SILVER	25.0	7.0	9.45	9.6	12	6-1	8-7
	HSS-C-Bu.Ag.16.0 mm²	SILVER	16.0	5.85	8.4	8.7	12	5-1	8-6
(10)	HSS-C-Bu.Ag.10.0 mm²-fine	SILVER	10.0	4.6	5.9	8.7	12	4-3	8-5
	HSS-C-Bu.Ag.10.0 mm²	SILVER	10.0	4.35	5.9	8.7	12	4-1	8-4
	HSS-C-Bu.Ag.6.0 mm²	SILVER	6.0	3.5	4.9	8.7	12	3-1	8-3
	HSS-C-Bu.Ag.4.0 mm²	SILVER	4.0	2.8	3.9	8.7	12	2-1	8-2
	HSS-C-Bu.Ag.2.5 mm²	SILVER	2.5	2.2	3.45	8.7	12	1-1	8-1
			[MM²]	"A"	"B"	"C"	[MM]	PN	PN

PARTS LIST

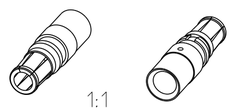

THIS DRAWING IS A CONTROLLED DOCUMENT.

DIMENSIONS: mm

TOLERANCES UNLESS OTHERWISE SPECIFIED:
0 PLC ±-
1 PLC ±-
2 PLC ±-
3 PLC ±-
4 PLC ±-
ANGLES ±0.5°

MATERIAL (1)
FINISH (2) (3)

DWN K.SCHROEDER 10APR2008
CHK H.BRAUN 10APR2008
APVD T.SCHNURPFEIL 10APR2008
PRODUCT SPEC 108-74016
APPLICATION SPEC 114-74028
WEIGHT -

TE Connectivity

NAME: SOCKET CONTACT SERIES HSS -

SIZE	CAGE CODE	DRAWING NO	RESTRICTED TO
A2	00779	C-1105151	-

Customer Drawing | SCALE 5:1 | SHEET 1 OF 1 | REV C6

Mouser Electronics

Authorized Distributor

Click to View Pricing, Inventory, Delivery & Lifecycle Information:

TE Connectivity:

1-1105151-1