THIS DRAWING IS UNPUBLISHED. RELEASED FOR PUBLICATION AUG ,2006.
© COPYRIGHT 2009 BY TYCO ELECTRONICS CORPORATION. ALL RIGHTS RESERVED.

LOC	DIST
DW	—

REVISIONS

P	LTR	DESCRIPTION	DATE	DWN	APVD
	C	REVISED (ECO-11-013077)	23JUN11	JC	WK

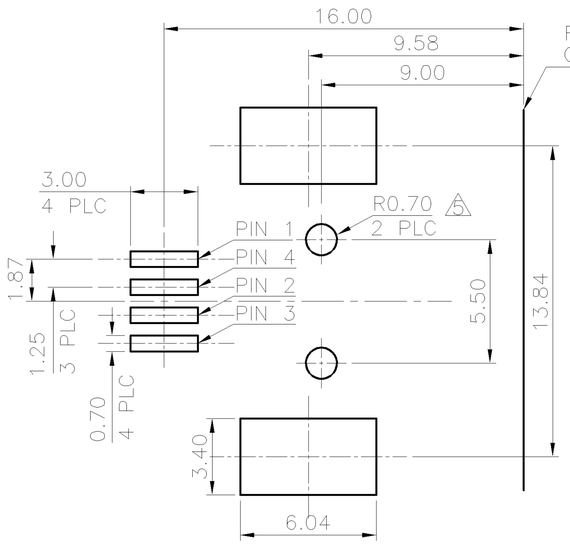

RECOMMENDED PCB LAYOUT

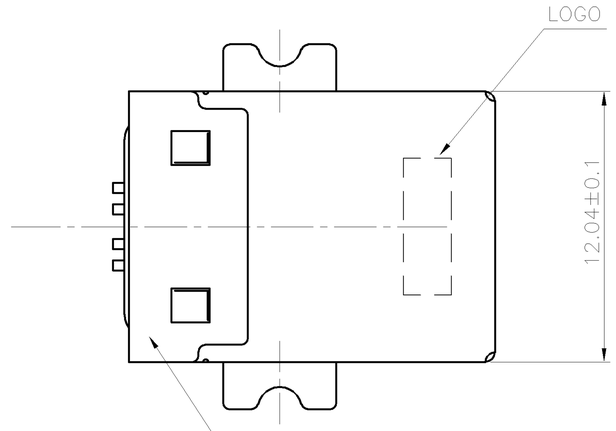

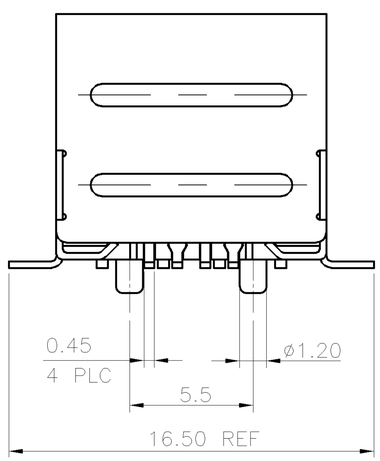

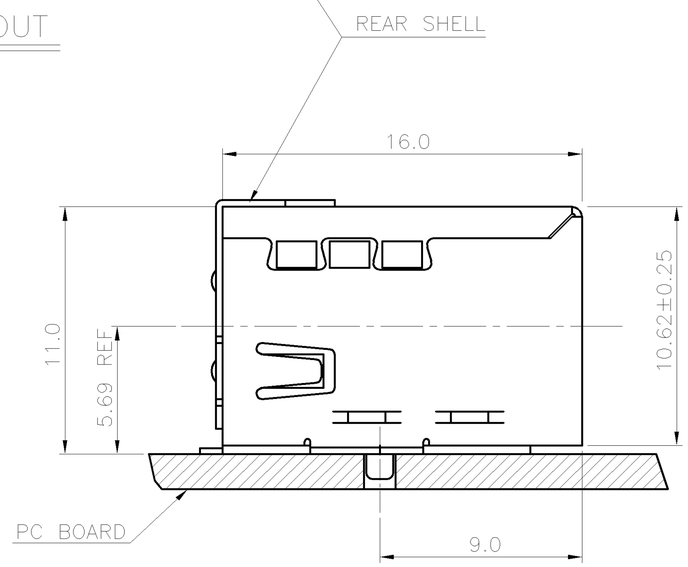

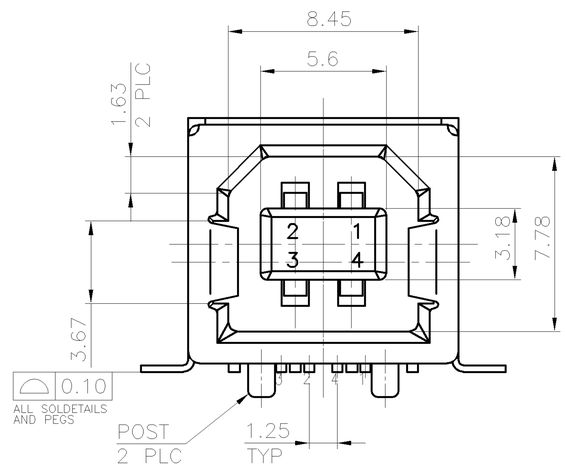

NOTE:

1. MATERIAL:
   HOUSING: THERMOPLASTIC HIGH TEMPERATURE, UL 94V-0, COLOR: BLACK.
   CONTACT: PHOSPHOR BRONZE, THICKNESS=0.25mm.
   SHELL: PHOSPHOR BRONZE, THICKNESS=0.30mm.
   REAR SHELL: STAINLESS, THICKNESS=0.30mm.
2. FINISH:
   CONTACT: ⚠A GOLD FLASH OVER 30u" MIN. PALLADIUM-NICKEL PLATED ON CONTACT AREA,
   ⚠B GOLD FLASH ON CONTACT AREA, 100u" MIN. MATTE-TIN PLATED ON SOLDER TAILS, 50u" MIN. NICKEL UNDERPLATED ALL OVER.
   SHELL: 30u"~ 90u" NICKEL PLATED OVER ALL.
3. PANEL THICKNESS OF 2.67mm MAXIMUM IF RECEPTACLE CONNECTOR IS MOUNTED BEHIND A PANEL.
4. REFLOW SOLDER CAPABLE TO 260°C PER TE SPEC 109-201, CONDITION B.

⚠5 PLEASE REMOVE POST HOLE ON PCB.
⚠6 NO EMBOSSED ON TOP SURFACE OF SHELL.
⚠7 OBSOLETE PARTS: OBSOLETE CIS STREAMLINING PER D.RENAUD/D.SINISI.

REAR SHELL	PACKAGE	POST	FINISH	HSG'S COLOR	PART NUMBER
W/O ⚠6	REEL	W/O ⚠5	⚠B	WHITE ⚠7	~~2-1734346-8~~
			⚠B	BLACK ⚠7	~~2-1734346-7~~
			⚠A	WHITE ⚠7	~~2-1734346-6~~
			⚠A	BLACK	2-1734346-5
		W/	⚠B	WHITE ⚠7	~~2-1734346-4~~
			⚠B	BLACK	2-1734346-3
			⚠A	WHITE ⚠7	~~2-1734346-2~~
			⚠A	BLACK	2-1734346-1
W/	REEL	W/O ⚠5	⚠B	WHITE ⚠7	~~1-1734346-8~~
			⚠B	BLACK	1-1734346-7
			⚠A	WHITE ⚠7	~~1-1734346-6~~
			⚠A	BLACK	1-1734346-5
		W/	⚠B	WHITE ⚠7	~~1-1734346-4~~
			⚠B	BLACK	1-1734346-3
			⚠A	WHITE	1-1734346-2
			⚠A	BLACK	1-1734346-1
	TRAY	W/O ⚠5	⚠B	WHITE ⚠7	~~1734346-8~~
			⚠B	BLACK ⚠7	~~1734346-7~~
			⚠A	WHITE ⚠7	~~1734346-6~~
			⚠A	BLACK ⚠7	~~1734346-5~~
		W/	⚠B	WHITE	1734346-4
			⚠B	BLACK	1734346-3
			⚠A	WHITE ⚠7	~~1734346-2~~
			⚠A	BLACK	1734346-1

THIS DRAWING IS A CONTROLLED DOCUMENT.

DIMENSIONS: MM

TOLERANCES UNLESS OTHERWISE SPECIFIED:

0 PLC	± 0.5
1 PLC	± 0.25
2 PLC	± 0.15
3 PLC	± 0.05
4 PLC	± –
ANGLES	± 3°

MATERIAL: SEE NOTE
FINISH: SEE NOTE

DWN O. HU 26OCT2005
CHK S. HOU 26OCT2005
APVD W.J. KE 26OCT2005
PRODUCT SPEC 108-57538
APPLICATION SPEC —
WEIGHT —

TE Connectivity

NAME
USB CONNECTOR, SERIES B, 4 POSITIONS, R/A, SMT TYPE, WITH REAR SHELL

SIZE A3 | CAGE CODE 00779 | DRAWING NO C-1734346 | RESTRICTED TO —

CUSTOMER DRAWING | SCALE — | SHEET 1 OF 3 | REV C

THIS DRAWING IS UNPUBLISHED. RELEASED FOR PUBLICATION AUG ,2006.
© COPYRIGHT 2009 BY TYCO ELECTRONICS CORPORATION. ALL RIGHTS RESERVED.

LOC	DIST
DW	—

REVISIONS

P	LTR	DESCRIPTION	DATE	DWN	APVD
		SEE SHEET 1.			

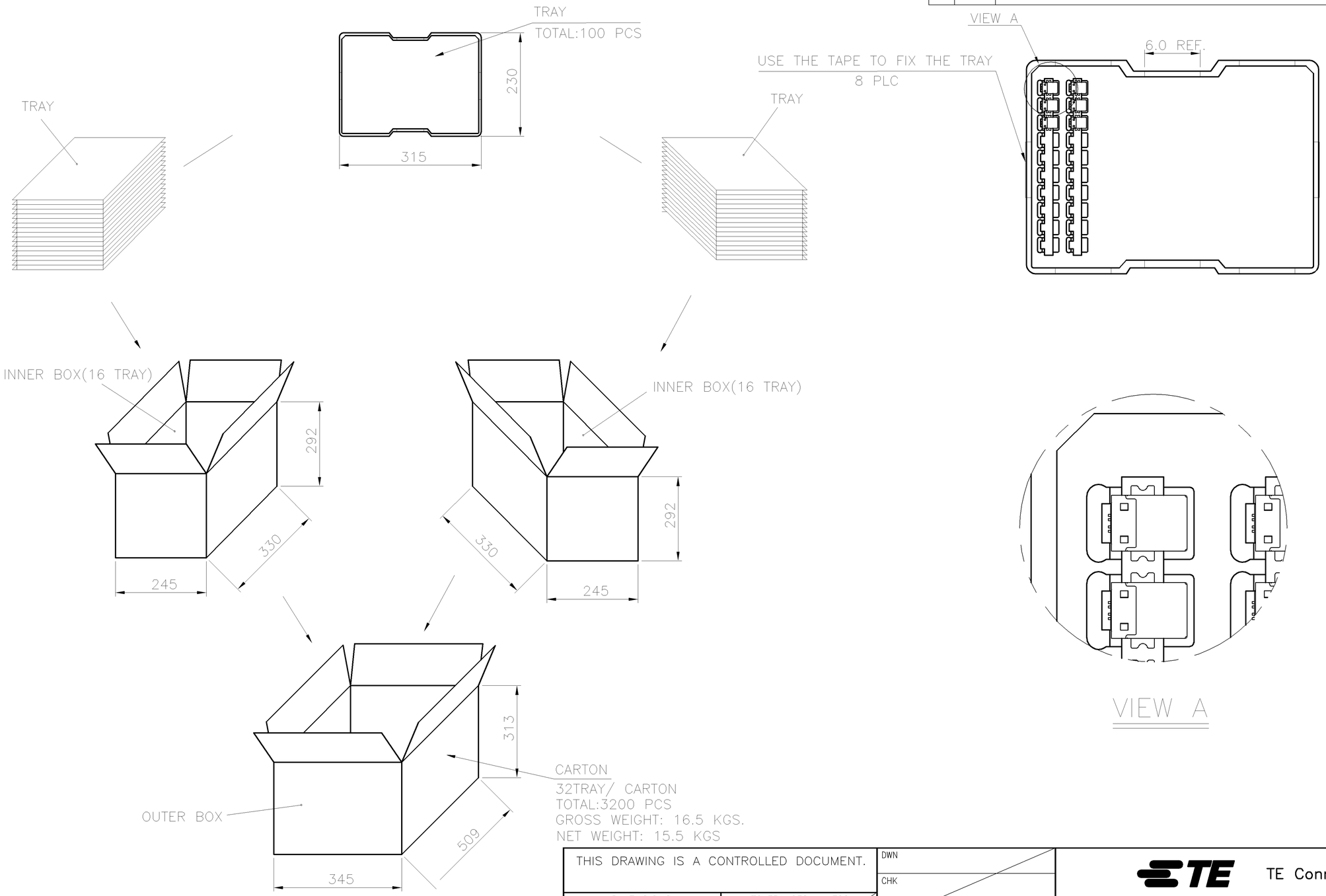

THIS DRAWING IS A CONTROLLED DOCUMENT.

DIMENSIONS: MM

TOLERANCES UNLESS OTHERWISE SPECIFIED:

0 PLC	± –
1 PLC	± –
2 PLC	± –
3 PLC	± –
4 PLC	± –
ANGLES	± –

MATERIAL –

FINISH –

DWN

CHK

APVD

PRODUCT SPEC —

APPLICATION SPEC —

WEIGHT —

TE Connectivity

NAME

USB CONNECTOR, SERIES B, 4 POSITIONS, R/A, SMT TYPE, WITH REAR SHELL

SIZE	CAGE CODE	DRAWING NO	RESTRICTED TO
A3	00779	C-1734346	—

CUSTOMER DRAWING

SCALE	SHEET	REV
—	2 OF 3	C

THIS DRAWING IS UNPUBLISHED. RELEASED FOR PUBLICATION AUG ,2006.
© COPYRIGHT 2009 BY TYCO ELECTRONICS CORPORATION. ALL RIGHTS RESERVED.

LOC	DIST
DW	—

REVISIONS

P	LTR	DESCRIPTION	DATE	DWN	APVD
		SEE SHEET 1.			

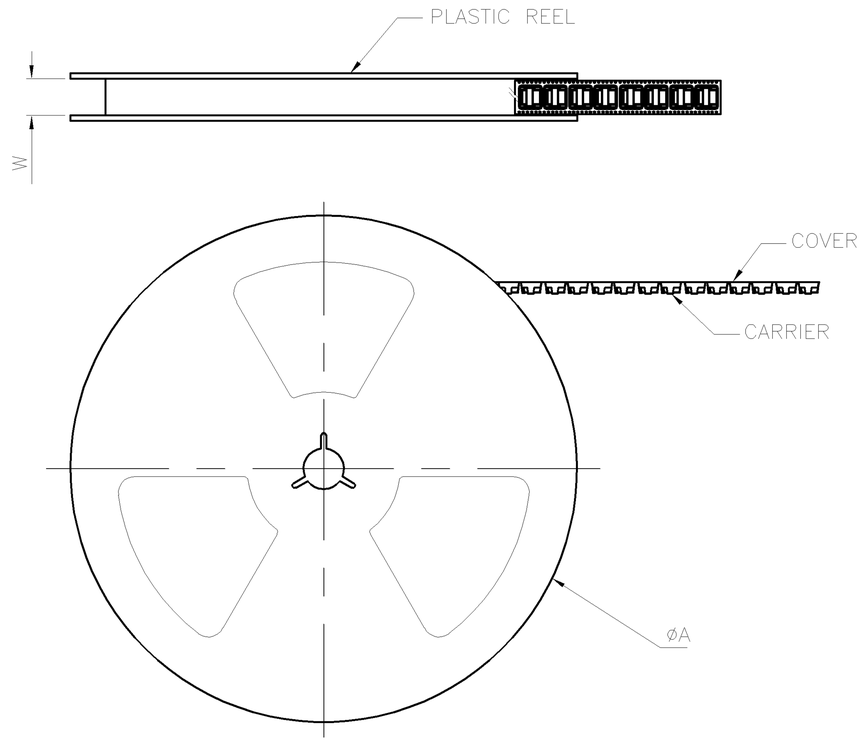

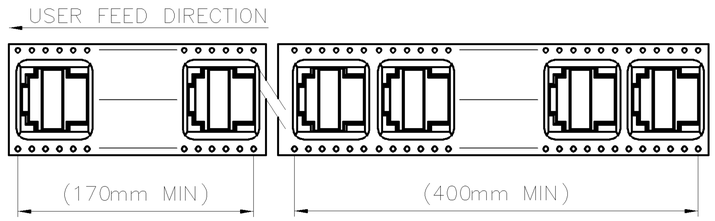

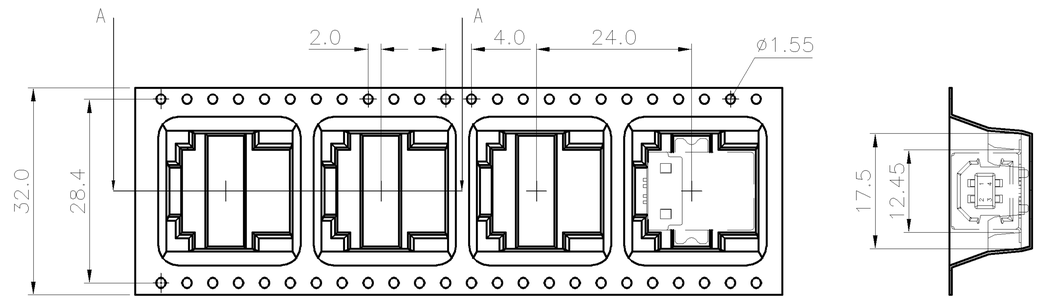

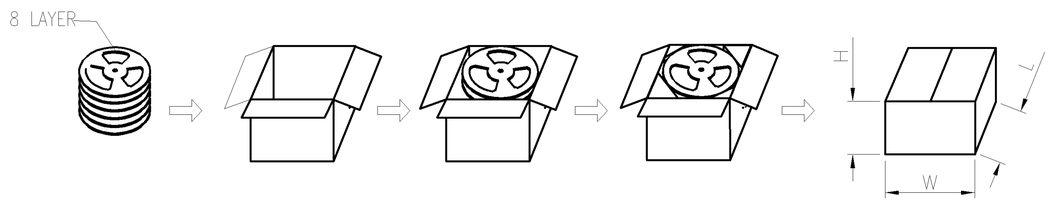

OUT BOX PACKAGE DIAGRAM DRAWING

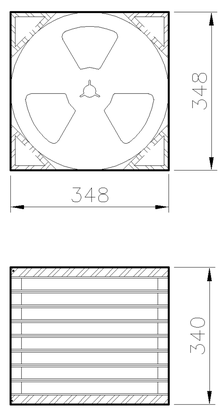

PACKING VIEW

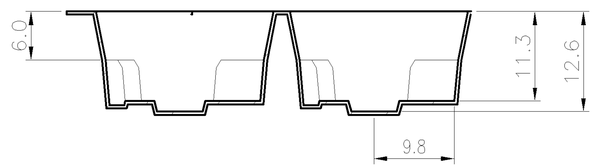

SECTION A–A

NOTE:
1. MATERIAL:
   EMBOSSED CARRIER :PS .
   COVER TAPE :PET.
   SHIPPING CARTON : CORRUGATED FIBERBOARD.
2. DIMENSION:
   REEL : W=32, ØA=330mm.
   SHIPPING CARTON : L=348, W=348, H=340mm.
3. QUANTITY:
   PRIMARY PACKING : 200 PCS/REEL.
   SECONARY PACKING : 8 REEL/CARTON(1,600PCS).
4. WEIGHT:
   NET WEIGHT : 9.5kg.
   GROSS WEIGHT : 10.5kg.

THIS DRAWING IS A CONTROLLED DOCUMENT.

DIMENSIONS: MM

TOLERANCES UNLESS OTHERWISE SPECIFIED:
0 PLC ± –
1 PLC ± –
2 PLC ± –
3 PLC ± –
4 PLC ± –
ANGLES ± –

MATERIAL –
FINISH –

DWN
CHK
APVD
PRODUCT SPEC —
APPLICATION SPEC —
WEIGHT —

TE Connectivity

NAME
USB CONNECTOR, SERIES B, 4 POSITIONS, R/A, SMT TYPE, WITH REAR SHELL

SIZE	CAGE CODE	DRAWING NO	RESTRICTED TO
A3	00779	C-1734346	—

CUSTOMER DRAWING | SCALE — | SHEET 3 OF 3 | REV C

Mouser Electronics

Authorized Distributor

Click to View Pricing, Inventory, Delivery & Lifecycle Information:

TE Connectivity:

2-1734346-1