THIS DRAWING IS UNPUBLISHED. RELEASED FOR PUBLICATION 20

© COPYRIGHT 20 BY TYCO ELECTRONICS CORPORATION. ALL RIGHTS RESERVED.

PART NUMBER	REV	FIRST USED	POWER UNIT	FEED TYPE	DESCRIPTION
1852342-1	A	122500-1	LEADMAKER	AIR FEED	CUTS CARRIER
1852342-2	A	565435-5	BENCH MODEL K	AIR FEED	CUTS CARRIER
1852342-3	A	354500-1	BENCH MODEL G	AIR FEED	CUTS CARRIER
1852342-6	A	122500-1	LEADMAKER	AIR FEED	CONTINUOUS CARRIER
7-1852342-7	A	-	-	-	SPARE PARTS

1. RECOMMENDED SPARE PARTS
2. GREASE LIGHTLY
3. GUARD MUST BE IN PLACE WHEN OPERATING APPLICATOR IN A BENCH MACHINE
4. CRIMP HEIGHTS FOR 1949162-1 ONLY.
5. CRIMP HEIGHTS FOR 1949163-1 ONLY.

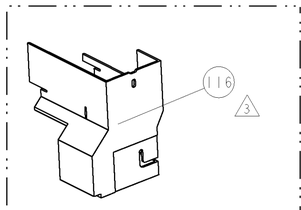

AMP-O-LECTRIC TERM GUARD

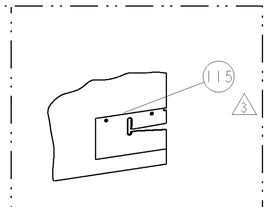

G TERMINATOR GUARD

TERMINAL NAME: SEALCO PIN & SOCKET

TYCO PN	SEALCO PN
1949162-1	NDM-2
1949163-1	NDF-2

SEALCO TERMINAL - AMP CRIMP SPECS

	4 CRIMP HEIGHT	WIRE SIZE	REF SETTING
-	-	4 .151±.003[3.84±0.07mm]	(2)10	A8
-	-	4 .150±.003[3.81±0.07mm]	8 & 14	A7
-	-	4 .139±.003[3.53±0.07mm]	10 & 12	C8
-	-	4 .137±.003[3.48±0.07mm]	8	D2

CRIMP	SIZE	TYPE	RANGE
WIRE	.210 [5.33mm]	F	8 - (2)10
INSUL	-	-	-

WIRE STRIP LENGTH	TERM APPL SPEC	FEED	APPLICATOR INSTRUCTIONS	SET UP GAGE
.220 -.235	NONE	.869	408-8040 & 408-8490	458637-1

ADDITIONAL CRIMP HEIGHTS

5 CRIMP HEIGHT	WIRE SIZE	REF SETTING
5 .140±.003[3.56±0.07mm]	(2)10	C6
5 .139±.003[3.53±0.07mm]	8 & 14	C4
5 .128±.003[3.25±0.07mm]	10 & 12	E6
5 .126±.003[3.20±0.07mm]	8	E9
-	-	-
-	-	-
-	-	-
-	-	-

* WARNING
ON INSTALLATION, SET WIRE DISC TO LARGEST WIRE SIZE SETTING. USE OF SETTINGS BELOW MIN. REQUIRED CRIMP HEIGHT SETTING WILL CAUSE DAMAGE TO CRIMP TOOLING.

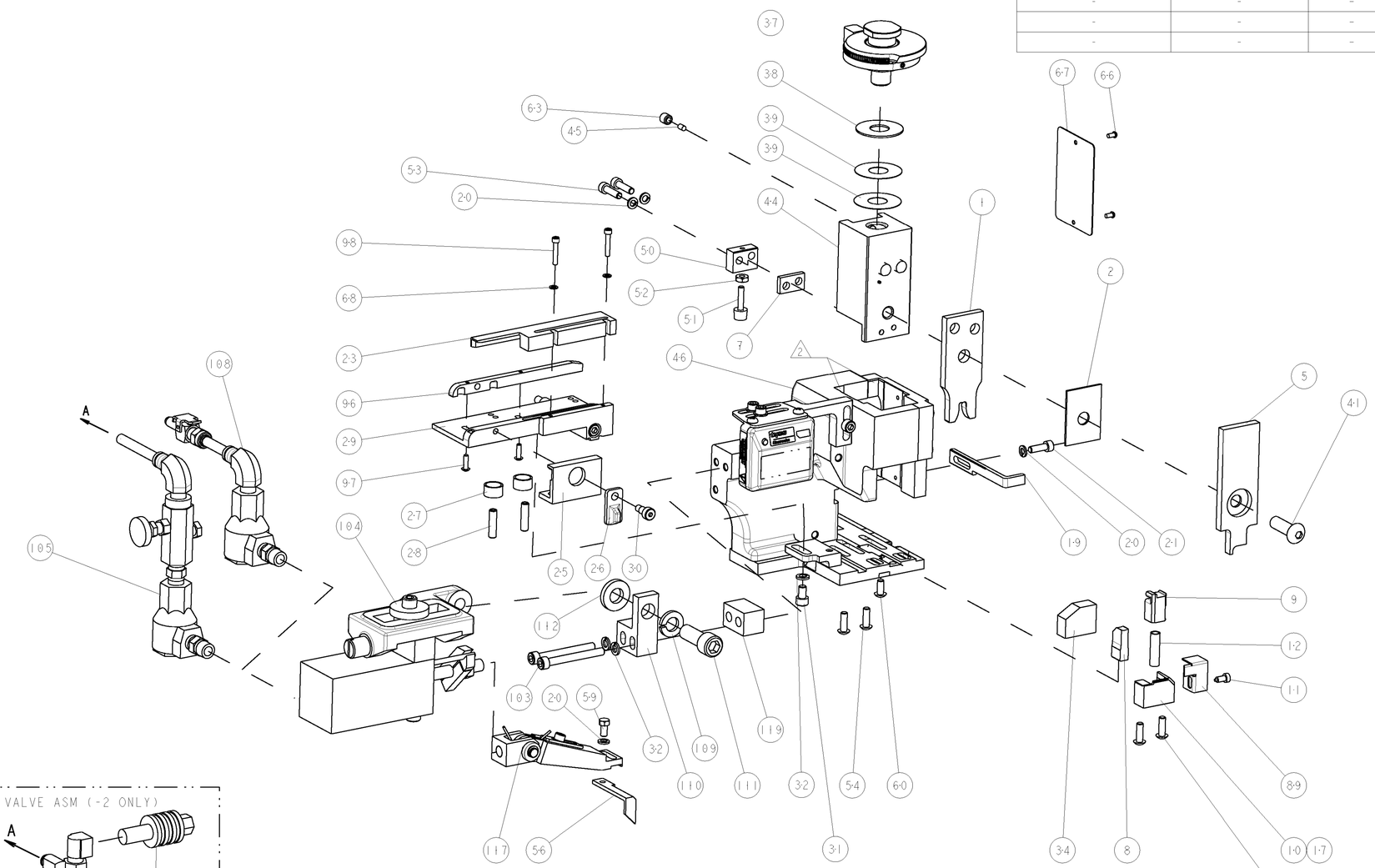

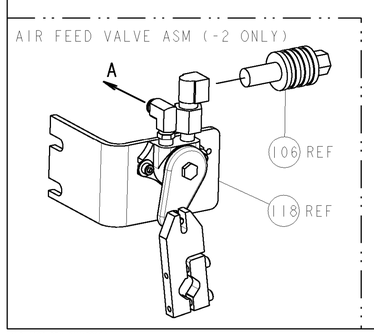

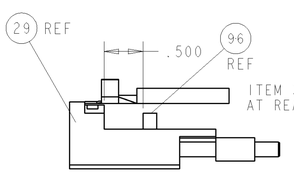

FEED TRACK POSITION

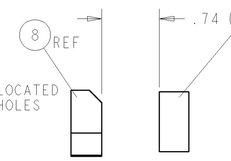

TERMINAL SUPPORT LOCATION

LOC	DIST
A	66

REVISIONS

P	LTR	DESCRIPTION	DATE	DWN	APVD
	A	RELEASED	06NOV2006	BH	BH

-77	-6	-3	-2	-1	U/M	PART NO	DESCRIPTION	ITEM NO
-	1	1	1	1	-	461690-3	SPACER, AIR FEED	119
-	-	-	REF	-	-	692655-6	AIR FEED VALVE ASSEMBLY	118
-	1	1	1	1	-	461062-1	FEED FINGER ASSEMBLY	117
3 -	-	-	REF	-	..	455749-1	GUARD WINDOW	116
3 -	-	REF	-	-	..	679532-1	INSERT, GUARD	115
-	1	1	1	1	-	371178	WASHER	112
-	1	1	1	1	-	3-21001-5	SCR, SKT HD CAP 3/8-16 X 1.000	111
-	1	1	1	1	-	459610-1	MOUNT, FEED BRACKET	110
-	1	1	1	1	-	21024-8	WASHER, SPRG LOCK, REG 3/8	109
-	1	1	-	1	-	692655-7	AIR FEED VALVE ASSEMBLY	108
-	-	-	REF	-	-	24024-2	VALVE, SHUT OFF	106
-	-	-	1	-	-	692655-5	AIR FEED VALVE ASSEMBLY	105
-	1	1	1	1	-	461065-1	ASSEMBLY, AIR FEED	104
-	2	2	2	2	-	4-21000-2	SCR, SKT HD CAP 10-32 X 1.750	103
-	2	2	2	2	-	1-21000-6	SCR, SKT HD CAP 4-40 X .625	98
-	2	2	2	2	-	1-21002-4	SCR, BTN SKT HD CAP 4-40 X .375	97
-	1	1	1	1	-	189807-2	FENCE	96
-	1	1	1	1	-	318563-1	GUARD, FRONT CHIP	89
-	1	1	1	1	-	4088040	SF APPL INST 408-8040	72
-	1	1	1	1	-	217238-1	GENERAL INSTRUCTION PKG	71
-	2	2	2	2	-	21024-2	WASHER, SPRG LOCK, REG NO 4	68
-	1	1	1	1	-	461264-5	PLATE, IDENTIFICATION	67
-	2	2	2	2	-	21017-2	SCREW, DRIVE	66
-	1	1	1	1	-	21009-2	SCR, SET, SELF LOCKING 1/4-20 X .250	63
-	1	1	1	1	-	22733-8	SCR, BHSC, SELF-LOCKING, 8-32 X .375	60
-	1	1	1	1	-	2-22603-0	SCR, HEX HD CAP 8-32 X .312	59
-	1	1	1	1	-	3-694433-1	FEED PAWL	56
-	4	4	4	4	-	2-21002-2	SCR, BTN SKT HD CAP 8-32 X .500	54
-	2	2	2	2	-	2-21000-8	SCR, SKT HD CAP 8-32 X .625	53
-	1	1	1	1	-	21018-5	NUT, HEX, REG 6-32	52
-	1	1	1	1	-	811242-2	BUMPER, HOLD DOWN	51
-	1	1	1	1	-	690753-1	SPACER, TONKER	50
-	1	1	1	1	-	1633399-1	APPL., BASIC AIR FEED SUB ASSY	46
-	1	1	1	1	-	690191-1	PLUG,NYLON	45
-	1	1	1	1	-	1-455673-5	RAM, SIDE FEED	44
-	1	1	1	1	-	7-21002-9	SCR, BTN SKT HD CAP 5/16-24 X 1.00	41
-	2	2	2	2	-	690125-1	SHIM SUB-ASSY	39
-	1	1	1	1	-	469367-7	SHIM	38
-	1	1	1	1	-	879103-4	FINE ADJUST HEAD ASSEMBLY	37
-	1	1	1	1	-	690786-1	TERMINAL SUPPORT	34
-	3	3	3	3	-	21024-5	WASHER, SPRG LOCK, REG NO 10	32
-	1	1	1	1	-	7-21000-6	SCR, SKT HD CAP 10-32 X .312	31
-	1	1	1	1	-	21989-8	SCR, SKT HD SHLDR 3/16 DIA X .250	30
-	1	1	1	1	-	1633091-6	ASSEMBLY, STRIP GUIDE	29
-	2	2	2	2	-	5-21006-6	SCR, SET, CUP POINT 10-32 X .750	28
-	2	2	2	2	-	1-22284-0	SPRING, COMPRESSION	27
-	1	1	1	1	-	356835-1	LEVER, DRAG RELEASE	26
-	1	1	1	1	-	240792-1	DRAG, TERMINAL	25
-	1	1	1	1	-	2-679651-8	FRONT STRIP GUIDE	23
-	1	1	1	1	-	2-21000-7	SCR, SKT HD CAP 8-32 X .500	21
-	4	4	4	4	-	21024-4	WASHER, SPRG LOCK, REG NO 8	20
-	-	1	1	-	-	2-690472-6	STRIPPER	19
1 -	1	-	-	-	-	679625-2	SHEAR HOLDER, FRONT (NO CUT)	17
-	1	1	1	1	-	3-22280-3	SPRING, COMPRESSION	12
-	1	1	1	1	-	1-690461-6	STOP, SHEAR	11
1 -	-	1	1	1	-	1-690459-0	SHEAR HOLDER, FRONT	10
1 -	1	1	1	1	-	454276-9	FLOATING SHEAR, FRONT	9
1 1	1	1	1	1	-	6-1633117-2	ANVIL, COMBINATION	8
-	1	1	1	1	-	240641-5	SPACER	7
-	1	1	1	1	-	2-455889-1	DEPRESSOR, SHEAR	5
-	1	1	1	1	-	1-455888-0	SPACER, CRIMPER	2
1 1	1	1	1	1	-	4-1673600-4	CRIMPER, WIRE	1

DWN B HIGMAN	03OCT2006	tyco Electronics	Tyco Electronics Harrisburg, PA 17105-3608
CHK B HIGMAN	03OCT2006		
APVD T.ELBIN	03OCT2006	NAME	FINE ADJUST SIDE FEED HDM APPLICATOR -
DIMENSIONS: INCHES	TOLERANCES UNLESS OTHERWISE SPECIFIED: 0 PLC ±- 1 PLC ±0.1 2 PLC ±0.01 3 PLC ±0.001 4 PLC ±0.0001 ANGLES ±-	PRODUCT SPEC -	
		APPLICATION SPEC NONE	
MATERIAL - -	FINISH - -	WEIGHT -	SIZE A1 / CAGE CODE 00779 / DRAWING NO C-1852342 / RESTRICTED TO -
		CUSTOMER DRAWING	SCALE 3:5 / SHEET 1 OF 1 / REV A

CUSTOMER VIEWABLE ASSEMBLY

AMP 4805 REV 31MAR2000

Pro/ENGINEER DRAWING

Mouser Electronics

Authorized Distributor

Click to View Pricing, Inventory, Delivery & Lifecycle Information:

TE Connectivity:

1852342-3