THIS DRAWING IS UNPUBLISHED. RELEASED FOR PUBLICATION ,19 .
© COPYRIGHT 19 BY AMP INCORPORATED. ALL RIGHTS RESERVED.

LOC	DIST
DS	

REVISIONS

P	LTR	DESCRIPTION	DATE	DWN	APVD
	O	RELEASED (FC00-0066-99)	'99 2/JUN	YD	CS
	A	REVISED (FC00-0026-00)	'00 20/MAR	YD	CS
	B	REVISED (FC00-0138-02)	'02 22/NOV	YD	CS
	C	REVISED (FC00-0023-05)	'05 18/JAN	YD	CS

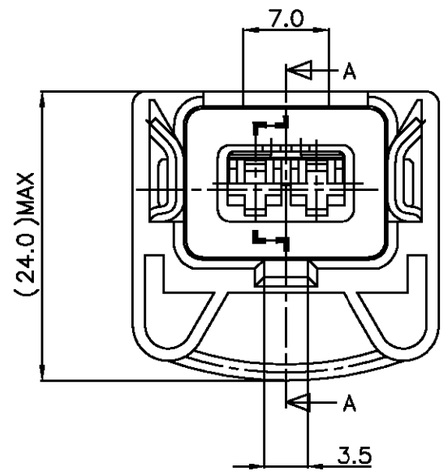

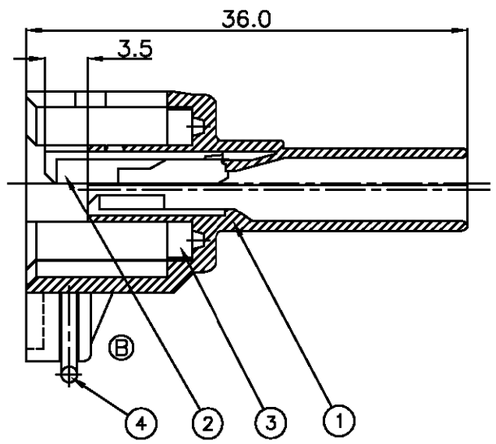

SECTION A-A

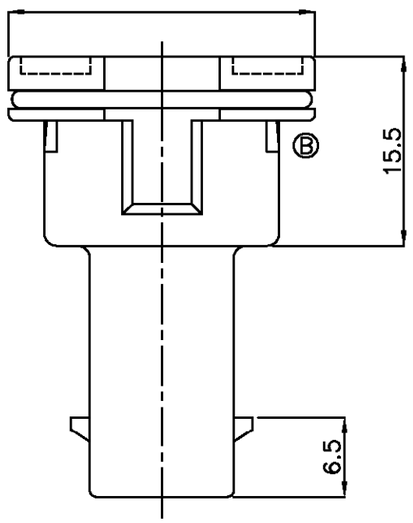

* NOTES *

1. APPLICABLE CONTACT P/NO: 927770 / 927766
2. APPLICABLE WIRE SEAL P/NO: 828904 / 828905 / 368064

	NO	P/NO	DESCRIPTION	MATERIAL	COLOR	Q'TY				
						JPT 2P ASS'Y FOR CLIP	JPT 2P ASS'Y FOR CLIP	JPT 2P ASS'Y FOR CLIP	JPT 2P ASS'Y FOR CLIP	JPT 2P ASS'Y FOR CLIP
						368354-5	368354-4	368354-3	368354-2	368354-1
	4	85387-1	SPRING	SUS 304	—	1	1	1	1	1
	3	85383-1	SEAL RUBBER	SILICONE	ORANGE	1	1	1	1	1
	2	85204-1	SPACER	PBT	YELLOW	1	1	1	1	1
©	1	368355-5	JPT 2P HSG FOR CLIP	PBT 30% GF	DARK GRAY	1				
	1	368355-4	JPT 2P HSG FOR CLIP	PBT 30% GF	BROWN		1			
	1	368355-3	JPT 2P HSG FOR CLIP	PBT 30% GF	GREEN			1		
	1	368355-2	JPT 2P HSG FOR CLIP	PBT 30% GF	BLUE				1	
	1	368355-1	JPT 2P HSG FOR CLIP	PBT 30% GF	BLACK					1

THIS DRAWING IS A CONTROLLED DOCUMENT FOR AMP INCORPORATED. IT IS SUBJECT TO CHANGE AND THE CONTROLLING ENGINEERING ORGANIZATION SHOULD BE CONTACTED FOR THE LATEST REVISION.

DIMENSIONS: MM

TOLERANCES UNLESS OTHERWISE SPECIFIED:
0<XX<10 ± 0.2
10<XX<30 ± 0.25
30<XX<100 ± 0.3
ANGLES ± 3°

3rd ANGLE PROJECTION

MATERIAL

FINISH

DWN : YD LEE
CHK : BM JANG
APVD : CS LEE
PRODUCT SPEC 108-61000
APPLICATION SPEC 114-18018
WEIGHT 4.90g

tyco Electronics

AMP KOREA.
kyungsan, korea

NAME JPT 2P ASS'Y FOR CLIP

SIZE A3 | CAGE CODE 00779 | DRAWING NO C- 368354

SCALE 2/1 | SHEET 1 OF 1 | REV C

AMP 1470-19 REV 09MAY94

Mouser Electronics

Authorized Distributor

Click to View Pricing, Inventory, Delivery & Lifecycle Information:

TE Connectivity:

368354-1