PART NAME	PTT SERIES 6 SIDE TERMINAL NARROW BLOCK BOX	PART No.	PTT-10683 & PTT-10683-C	REVISION DATE	10/30/17

DRAWING FOR REFERENCE

WE RESERVE THE RIGHT TO MAKE CHANGES TO OUR STANDARD PRODUCTS. PLEASE CONSULT WITH BUD INDUSTRIES PRIOR TO USING THIS DRAWING FOR DESIGN PURPOSE.

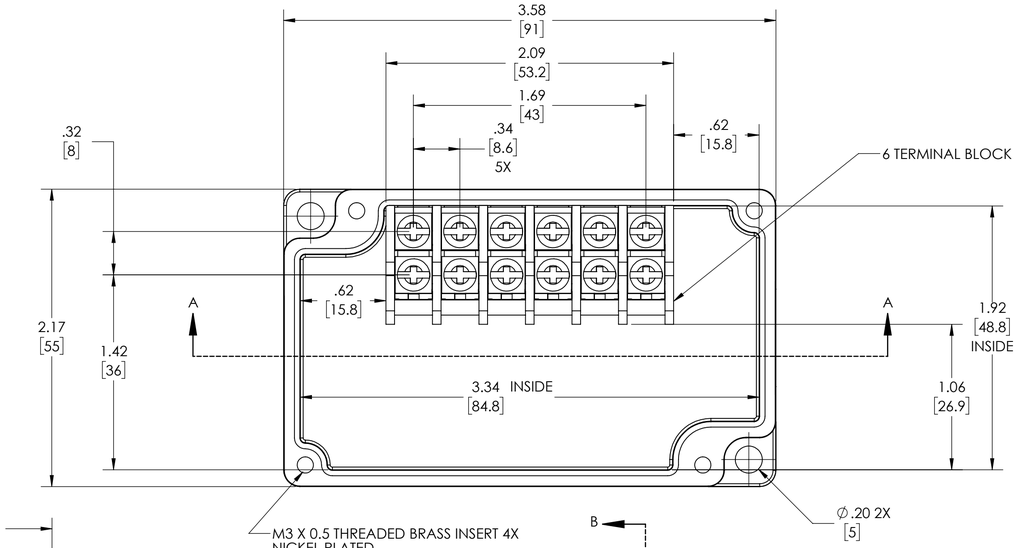

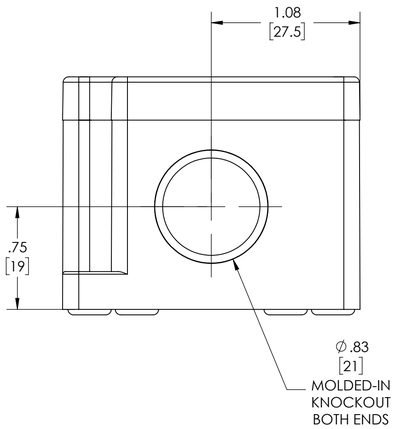

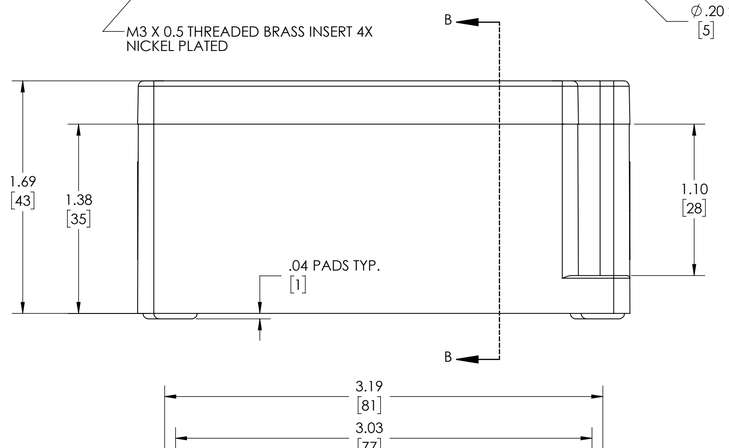

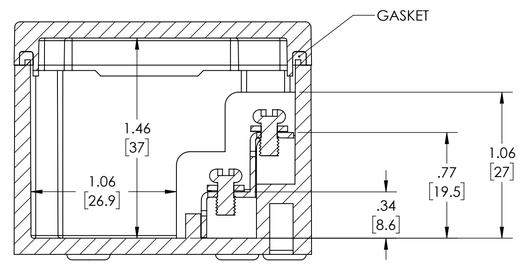

SECTION B-B
SCALE 2 : 1.25

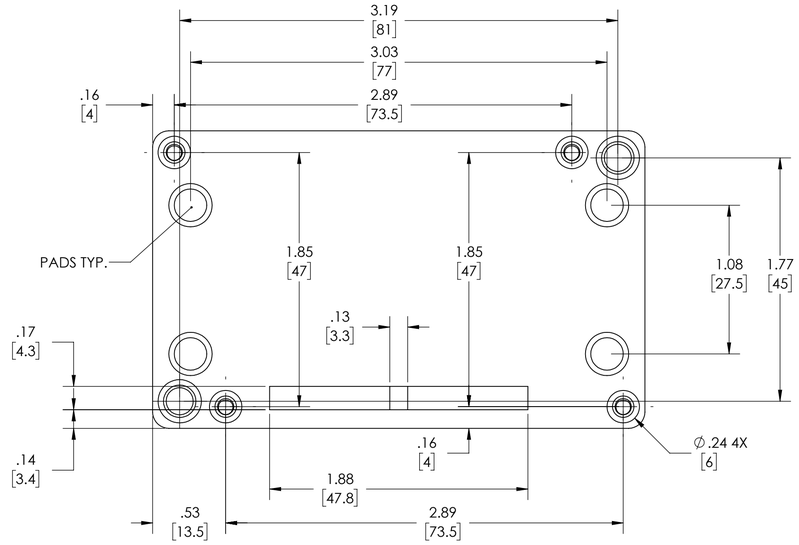

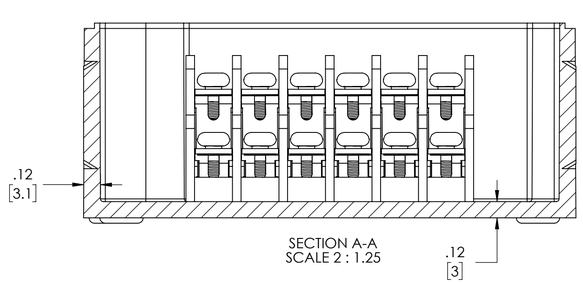

SECTION A-A
SCALE 2 : 1.25

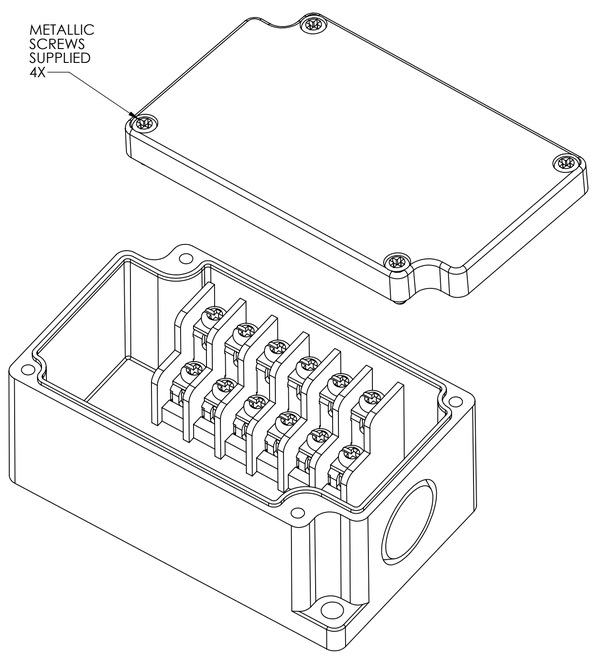

NOTES:

1- MATERIAL: BODY - GRAY ABS UL94 V-0
COVER - GRAY ABS OR CLEAR (-C SUFFIX) POLYCARBONATE

2- HIGH IMPACT RESISTANCE IK 07/08

3- TUV RATING IP66/67

4- CONTINUOUS POURED GASKET IN COVER

5- COVER ATTACHES WITH STAINLESS STEEL M3 X 0.5 SCREWS SUPPLIED

6- TEMPERATURE RANGE -40° ~ +70° F.

7- TERMINAL FEATURES:
SURFACE TREATED STEEL TERMINAL SCREWS
RATED INSULATION VOLTAGE 400V
RATED IMPULSE VOLTAGE 4KV
RATED CURRENT CAPACITY .75mm² - 1.5mm²

8- DIMENSIONS ARE INCH [MM]

9- OPTIONAL EXTERNAL MOUNTING BRACKETS NOT INCLUDED,
PART NUMBERS NBX-10922 & PIX-4117

Mouser Electronics

Authorized Distributor

Click to View Pricing, Inventory, Delivery & Lifecycle Information:

Bud Industries:

PTT-10683 PTT-10683-C