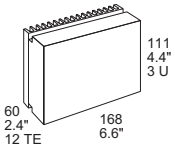

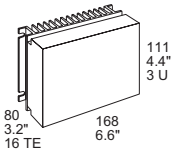

Description

The PSK/PSS Series of positive switching regulators is designed as power supplies for electronic systems, where no input-to-output isolation is required. Their major advantages include a high level of efficiency, high reliability, low output ripple, and excellent dynamic response. Models with input voltages up to 144 V are specially designed for secondary switched and battery-driven mobile applications. The converters are suitable for railway applications according to EN 50155 and EN 50121.

Two type of housings are available allowing operation up to 71 °C. They are designed for insertion into a 19" DIN-rack or for chassis mounting. Replacing the heat sink by an optional cooling plate, allows chassis or wall mounting on top of a metal surface, acting as heat sink.

Various options are available to adapt the converter to different applications. Connector type: H15 or H15S4, depending on output current.

Features

- RoHS lead-free-solder and lead-solder-exempted products are available
- Input voltage up to 144 VDC
- Single output of 3.3 to 48 VDC
- No input-to-output isolation
- High efficiency up to 97%
- Extremely wide input voltage range
- Low input-to-output differential voltage
- Very good dynamic properties
- Input undervoltage lockout
- Active current sharing for parallel operation
- Output voltage adjustment, inhibit, and sense lines
- Continuously no-load and short-circuit proof
- All boards are coated with a protective lacquer
- Safety-approved to IEC/EN 60950-1 and UL/CSA 60950-1 2nd Ed.

Table of Contents

	Page
Description	1
Model Selection	2
Functional Description	3
Electrical Input Data	4
Electrical Output Data	6
Auxiliary Functions	10
Electromagnetic Compatibility (EMC)	12
Immunity to Environmental Conditions	14
Mechanical Data	15
Safety and Installation Instructions	18
Description of Options	19
Accessories	20

Model Selection

Table 1: All models

Output voltage $V_{o\,nom}$ [V]	Output current $I_{o\,nom}$ [A]	Operating input voltage range V_i [V]	Nom. input voltage $V_{i\,nom}$ [V]	Efficiency [2] η_{min} [%]	η_{typ} [%]	Type designation	Connector type	Options
3.3	25	8 – 40	20	81	82	*PSK3E25-7*	H15S4	*B, B1*
5.1	12	8 – 80	40	78	79	PSS5A12-9	H15	B, B1, G
5.1	14	8 – 40	20	83		*PSS5A14-2* [4]	H15	*B, B1*
5.1	16	8 – 80	40	78	79	PSK5A16-9	H15	-7, E, P, C, B, B1, G
5.1	18	8 – 40	20	82		*PSK5A18-2* [4]	H15	*B, B1*
5.1	20	8 – 80	40	78	79	PSK5A20-9	H15S4	-7, E, P, C, K, B, B1, G
5.1	25	8 – 40	20	84	87	PSK5A25-9	H15S4	-7, E, P, C, K, B, B1, G
12	9	18 – 144 [1]	60	90	91	PSS129-9	H15	-7, E, B, B1, G
12	12	15 – 80	40	90	91	PSS1212-9	H15	B, B1, G
12	12	18 – 144 [1]	60	90	91	PSK1212-9	H15	-7, E, P, C, B, B1, G
12	14	15 – 40	30	90		*PSS1214-2* [4]	H15	*B, B1*
12	16	15 – 80	40	89	90	PSK1216-9	H15	-7, E, P, C, B, B1, G
12	18	15 – 40	30	90		*PSK1218-2*	H15	*B, B1*
12	20	15 – 80	40	89	90	PSK1220-9	H15S4	-7, E, P, C, K, B, B1, G
15 [3]	9	22 – 144 [1]	60	90	92	PSS129-9	H15	-7, E, B, B1, G
15 [3]	12	19 – 80	40	90	92	PSS1212-9	H15	B, B1, G
15 [3]	12	22 – 144 [1]	60	90	92	PSK1212-9	H15	-7, E, P, C, B, B1, G
15 [3]	14	19 – 40	30	90		*PSS1214-2* [4]	H15	*B, B1*
15 [3]	16	19 – 80	40	89	90	PSK1216-9	H15	-7, E, P, C, B, B1, G
15 [3]	18	19 – 40	30	90		*PSK1218-2* [4]	H15	*B, B1*
15 [3]	20	19 – 80	40	89	90	PSK1220-9	H15S4	-7, E, P, C, K, B, B1, G
24	9	31 – 144 [1]	60	93	94	PSS249-9	H15	-7, E, P, C, B, B1, G
24	12	29 – 80	50	93.5	94	PSS2412-9	H15	-7, E, P, B, B1, G
24	12	31 – 144 [1]	60	93.5	94	PSK2412-9	H15	-7, E, P, C, B, B1, G
24	14	29 – 60	40	94.5		*PSS2414-2* [4]	H15	*B, B1*
24	16	29 – 80	50	93.5	94	PSK2416-9	H15	-7, E, P, C, B, B1, G
24	18	29 – 60	40	94		*PSK2418-2* [4]	H15	*B, B1*
24	20	29 – 80	50	93.5	95	PSK2420-9	H15S4	-7, E, P, C, K, B, B1, G
36	9	44 – 144 [1]	80	95	96	PSS369-9	H15	-7, E, P, B, B1, G
36	12	42 – 80	60	95	94	PSS3612-9	H15	B, B1, G
36	12	44 – 144 [1]	80	95	96	PSK3612-9	H15	-7, E, P, C, B, B1, G
36	16	42 – 80	60	94.5	95	PSK3616-9	H15	-7, E, P, C, B, B1, G
36	20	42 – 80	60	94.5	95	PSK3620-9	H15S4	-7, E, P, C, K, B, B1, G
48	9	58 – 144 [1]	80	96	97	*PSS489-9*	H15	*B, B1*
48	12	58 – 144 [1]	80	96	97	PSK4812-9	H15	-7, E, P, C, B, B1, G

1 Surges up to 156 V for 2 s; see *Electrical Input Data*
2 Efficiency at $V_{i\,nom}$ and $I_{o\,nom}$. Models with opt. K (standard H15 connector) exhibit approx. 1 to 2% lower efficiency.
3 Output voltage V_o set to 15 V by R input
4 Use other PSK/PSS models with same case size (PSK or PSS) and same connector (H15 or H15S4).

Note: Non-standard input/output configurations or special custom adaptions are available on request.

NFND: Not for new designs Preferred for new designs

Part Number Description

PSK 12 12 -9 E P C B G

Positive switching regulator in case S01, K01 ..... PSS, PSK
Nominal output voltage in Volt ..... 3.3 – 48
Nominal output current in Ampere ..... 9 – 25
Operational ambient temperature range T_A
– 10 to 50 °C ..... -2
– 25 to 71 °C ..... -7
– 40 to 71 °C (optional) ..... -9

Options: Inrush current limitation ..... E
Potentiometer to adjust V_o[1] ..... P
Thyristor crowbar C
Standard H15 connector ..... K
Cooling plate large/small ..... B, B1
RoHS-compliant for all 6 substances ..... G[2]

[1] Option P excludes R-features and vice versa.
[2] G is always placed at the end of the part number.

Example: PSS129-9EPCB = Positive switching regulator with output 12 V, 9 A, ambient temperature range of –25 to 71 °C, inrush current limitation, potentiometer, crowbar, and large cooling plate option B.

Note: The sequence of options must follow the order above.

Product Marking

Type designation, applicable approvals marks, warnings, pin allocation, identification of LED, test sockets, and optional potentiometer.

Label with input voltage range, output voltage and current, protection degree, batch and serial no., and data code including production site, version, and date of production.

Functional Description

The switching regulators are using the buck topology. The input is not electrically isolated from the output. During the on period of the switching FET, current is transferred to the output, and energy is stored in the output choke. During the off period, this energy forces the current to continue flowing through the output choke and the freewheeling diode to the load. Regulation is accomplished by varying on/off duty cycle. Switching frequency is approx. 100 kHz. The converters exhibit an undervoltage monitor to prevent high currents at low input voltage, but no overvoltage monitor.

These regulators are ideal for applications, where an input to output isolation is not necessary or where it is already provided by an external front end, e.g. a transformer with rectifier. To optimize customer's needs, various options and accessories are available.

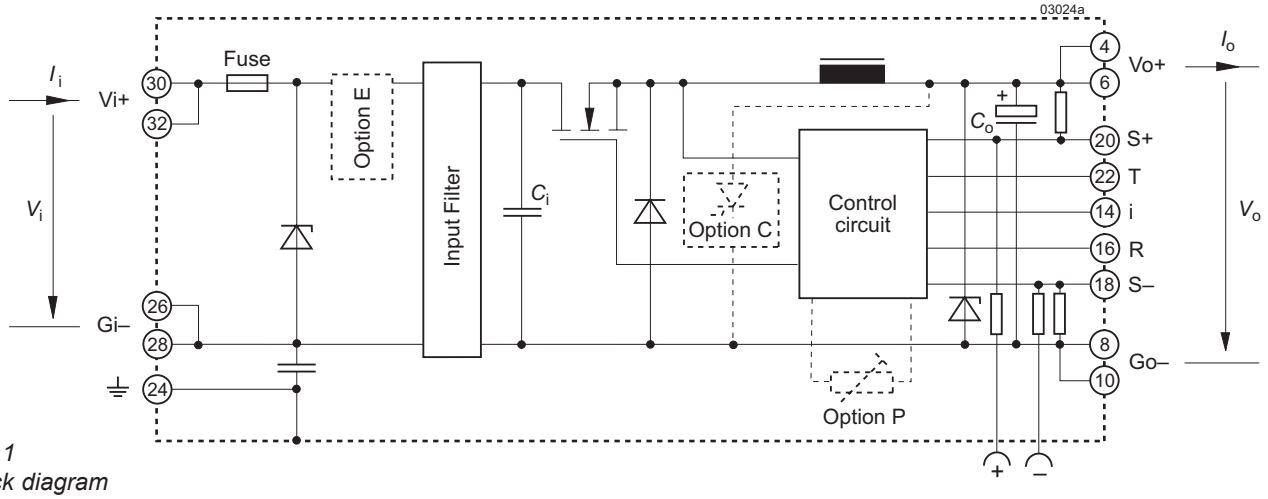

Fig. 1
Block diagram

Electrical Input Data

Table 2a: Input data. General Conditions: T_A = 25 °C, unless T_C is specified

Input			PSS5A14 PSK5A18			PSS1214 PSK1218			PSS2414 PSK2418			Unit
Characteristics		**Conditions**	**min**	**typ**	**max**	**min**	**typ**	**max**	**min**	**typ**	**max**	
V_i	Operating input voltage	$I_o = 0 - I_{o\,nom}$ $T_{C\,min} - T_{C\,max}$	8		40	15/19 [1]		40	29		60	VDC
$\Delta V_{io\,min}$	Min. diff. voltage $V_i - V_o$				2.9			3/4 [1]			5	
$V_{i\,o}$	Undervoltage lockout			7.3			7.3			12		
$I_{i\,0}$	No load input current	$I_o = 0$, $V_{i\,min} - V_{i\,max}$			50			50			50	mA
$I_{inr\,p}$	Peak value of inrush current	$V_{i\,nom}$, with option E			20			40			40	A
C_x	Input capacitance			1600			1600			1600		µF

[1] The second value is valid, if output is set to 15 V with the R-input.

Table 2b: Input data. General Conditions: T_A = 25 °C, unless T_C is specified

Input			PSK3E25 PSK5A25			PSS5A12 PSK5A16 PSK5A20			PSS1212 PSK1216 PSK1220			Unit
Characteristics		**Conditions**	**min**	**typ**	**max**	**min**	**typ**	**max**	**min**	**typ**	**max**	
V_i	Operating input voltage[1]	$I_o = 0 - I_{o\,nom}$ $T_{C\,min} - T_{C\,max}$	8		40	8		80	15		80	VDC
$\Delta V_{io\,min}$	Min. diff. voltage $V_i - V_o$				4.7/2.9 [1]			2.9			3	
$V_{i\,o}$	Undervoltage lock-out			6.5			6.5			7.3		
$I_{i\,0}$	No load input current	$I_o = 0$, $V_{i\,min} - V_{i\,max}$			50			50			50	mA
$I_{inr\,p}$	Peak value of inrush current	$V_{i\,nom}$, with option E			20			40			40	A
C_x	Input capacitance			1600			1600			1600		µF

[1] Values for PSK3E25/PSK5A20

Table 2c: Input data. General Conditions: T_A = 25 °C, unless T_C is specified

Input			PSS1212 [1] PSK1216 PSK1220			PSS2412 PSK2416 PSK2420			PSS3612 PSK3616 PSK3620			Unit
Characteristics		**Conditions**	**min**	**typ**	**max**	**min**	**typ**	**max**	**min**	**typ**	**max**	
V_i	Operating input voltage[1]	$I_o = 0 - I_{o\,nom}$ $T_{C\,min} - T_{C\,max}$	19		80	29		80	42		80	VDC
$\Delta V_{io\,min}$	Min. diff. voltage $V_i - V_o$				4			5			6	
$V_{i\,o}$	Undervoltage lock-out			7.3			12			19		
$I_{i\,0}$	No load input current	$I_o = 0$, $V_{i\,min} - V_{i\,max}$			50			50			50	mA
$I_{inr\,p}$	Peak value of inrush current	$V_{i\,nom}$, with option E			40			50			90	A
C_x	Input capacitance			1600			1600			1600		µF

[1] Output set to 15 V with the R-input.

Table 2d: Input data. General Conditions: T_A = 25 °C, unless T_C is specified

Input			PSS129 PSK1212			PSS129 [1] PSK1212 [1]			PSS249 PSK2412			Unit
Characteristics		**Conditions**	**min**	**typ**	**max**	**min**	**typ**	**max**	**min**	**typ**	**max**	
V_i	Operating input voltage	I_o = 0 – $I_{o\,nom}$ $T_{C\,min}$ – $T_{C\,max}$	18		144 [2]	22		144[2]	31		144[2]	VDC
$\Delta V_{io\,min}$	Min. diff. voltage V_i – V_o				6			7			7	
$V_{i\,o}$	Undervoltage lock-out			12			12			24		
$I_{i\,0}$	No load input current	I_o = 0, $V_{i\,min}$ – $V_{i\,max}$			50			50			50	mA
$I_{inr\,p}$	Peak value of inrush current	$V_{i\,nom}$, with option E			4.5			4.5			4.5	A
C_x	Input capacitance			620			620			620		µF

[1] Output set to 15 V with the R-input.
[2] Surges up to 156 V for 2 s are allowed (no shutdown).

Table 2e: Input data. General Conditions: T_A = 25 °C, unless T_C is specified

Input			PSS369 PSK3612			PSS488 PSK4812			Unit
Characteristics		**Conditions**	**min**	**typ**	**max**	**min**	**typ**	**max**	
V_i	Operating input voltage	I_o = 0 – $I_{o\,nom}$ $T_{C\,min}$ – $T_{C\,max}$	18		144 [1]	22		144 [1]	VDC
$\Delta V_{io\,min}$	Min. diff. voltage V_i – V_o				8			10	
$V_{i\,o}$	Undervoltage lock-out			36			48		
$I_{i\,0}$	No load input current	I_o = 0, $V_{i\,min}$ – $V_{i\,max}$			50			50	mA
$I_{inr\,p}$	Peak value of inrush current	$V_{i\,nom}$, with option E			6			6	A
C_x	Input capacitance			620			620		µF

[1] Surges up to 156 V for 2 s are allowed (no shutdown).

Input Filter and Fuse

An input filter and a fuse are incorporated in all converters as standard. The filter reduces emitted electrical noise and prevents oscillations caused by the negative input impedance characteristic of a switched mode regulator. The input fuse protects against fatal defects; see table 3.

Table 3: Input fuses

Model	Fuse type	Size	Supplier
PSK3E25, PSK5A20, PSK5A25 PSK1220, PSK2420, PSK3620	F 25 A	6.3 × 32 mm	Littlefuse
PSK5A16, PSK1216, PSK1218 PSK2416, PSK2418, PSK3620	F 20 A		
PSS5A12, PSS5A14, PSS1212, PSK1212, PSS1214 PSS2412, PSK2412, PSS2414 PSS3612, PSK3612, PSK3616 PSK4812	F 15 A		
PSS129, PSS249 PSS369, PSS489	F 10 A		

The maximum permissible additionally superimposed ripple v_i of the input voltage (rectifier mode) at a specified input frequency f_i has the following values:

$$v_{i\,max} = 1000\ \text{Hz}/f_i \cdot 1\ \text{V (or 10 } V_{pp} \text{ at 100 Hz)}$$

Inrush Current

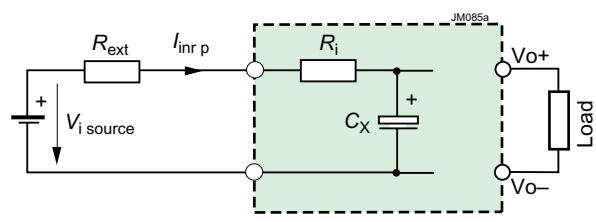

Fig. 2
Equivalent input circuit

Depending on the input source and the input impedance, the inrush current into the converter may reach a high peak value during the switch-on. The inrush current peak value can be determined by following calculation; see also fig. 2:

$$I_{inr\,p} = \frac{V_{i\,source}}{(R_{s\,ext} + R_i)}$$

To limit the inrush current, we recommend the choice of the active inrush current limitation circuit, option E.

Electrical Output Data

General Conditions:

- T_A = 25°C, unless T_C is specified
- R control (pin 16) not connected or progammed to $V_{o\,nom}$ at $I_{o\,nom}$
- Inhibit input (pin 14) connected to Go–
- Sense lines S+ and S– connected at female connector

Table 3a: Output data of PSS models

Output				PSS5A12			PSS1212			PSS1212 [1]			Unit
Characteristics			Conditions	min	typ	max	min	typ	max	min	typ	max	
V_o	Output voltage		$V_{i\,nom}$, $I_{o\,nom}$	5.07		5.13	11.93		12.07	14.91		15.09	V
I_o	Output current		$V_{i\,min} - V_{i\,max}$ $T_{C\,min} - T_{C\,max}$	0		12	0		12	0		12	A
I_{oL}	Output current limit			12		15	12		15	12		15	
v_o	Output voltage noise	Switching freq.	$V_{i\,nom}$, $I_{o\,nom}$ IEC/EN 61204 BW = 20 MHz		20	40		20	45		30	50	mV_{pp}
		Total incl. spikes			24	44		29	49		34	54	
$\Delta V_{o\,V}$	Static line regulation		$V_{i\,min} - V_{i\,max}$, $I_{o\,nom}$		15	35		40	70		50	80	mV
$\Delta V_{o\,I}$	Static load regulation		$V_{i\,nom}$, $I_o = 0 - I_{o\,nom}$		10	25		30	50		35	55	
$v_{o\,d}$	Dynamic load regulation	Voltage deviat.	$V_{i\,nom}$ $I_{o\,nom} \leftrightarrow {}^1/_3\, I_{o\,nom}$ IEC/EN 61204		70			140			150		
t_d		Recovery time			40			60			60		µs
α_{Vo}	Temperature coefficient $\Delta V_o/\Delta T_C$ ($T_{C\,min}$ to $T_{C\,max}$)		$V_{i\,min} - V_{i\,max}$ $I_o = 0 - I_{o\,nom}$			±1			±3			±4	mV/K
						±0.02			±0.02			±0.02	%/K

[1] Output set to 15 V with R-input.

Table 3b: Output data of PSS models. General conditions as per table 3a

Output				PSS2412			PSS2414			PSS3612			Unit
Characteristics			Conditions	min	typ	max	min	typ	max	min	typ	max	
V_o	Output voltage		$V_{i\,nom}$, $I_{o\,nom}$	23.86		24.14	23.2		24.7	35.78		36.22	V
I_o	Output current		$V_{i\,min} - V_{i\,max}$ $T_{C\,min} - T_{C\,max}$	0		12	0		14	0		12	A
I_{oL}	Output current limit			12		15	14		17.5	12		15	
v_o	Output voltage noise	Switching freq.	$V_{i\,nom}$, $I_{o\,nom}$ IEC/EN 61204 BW = 20 MHz		30	60			300		35	60	mV_{pp}
		Total incl. spikes			34	64			310		39	64	
$\Delta V_{o\,V}$	Static line regulation		$V_{i\,min} - V_{i\,max}$, $I_{o\,nom}$		80	170			480		120	250	mV
$\Delta V_{o\,I}$	Static load regulation		$V_{i\,nom}$, $I_o = 0 - I_{o\,nom}$		50	120			240		60	200	
$v_{o\,d}$	Dynamic load regulation	Voltage deviat.	$V_{i\,nom}$ $I_{o\,nom} \leftrightarrow {}^1/_3\, I_{o\,nom}$ IEC/EN 61204		180			700			200		
t_d		Recovery time			60			60			70		µs
α_{Vo}	Temperature coefficient $\Delta V_o/\Delta T_C$ ($T_{C\,min}$ to $T_{C\,max}$)		$V_{i\,min} - V_{i\,max}$ $I_o = 0 - I_{o\,nom}$			±5			±5			±8	mV/K
						±0.02			±0.02			±0.02	%/K

Table 3c: Output data of PSS models. General conditions as per table 3a

Output				PSS129			PSS129 [1]			PSS249			Unit
Characteristics			Conditions	min	typ	max	min	typ	max	min	typ	max	
V_o	Output voltage		$V_{i\,nom}$, $I_{o\,nom}$	11.93		12.07	14.91		15.09	23.86		24.14	V
I_o	Output current		$V_{i\,min} - V_{i\,max}$ $T_{C\,min} - T_{C\,max}$	0		9	0		9	0		9	A
I_{oL}	Output current limit			9		11.25	19		11.25	9		11.25	
v_o	Output voltage noise	Switching freq.	$V_{i\,nom}$, $I_{o\,nom}$ IEC/EN 61204 BW = 20 MHz		25	50		20	45		30	50	mV_{pp}
		Total incl. spikes			29	54		34	64		39	65	
$\Delta V_{o\,V}$	Static line regulation		$V_{i\,min} - V_{i\,max}$, $I_{o\,nom}$		40	70		50	80		80	170	mV
$\Delta V_{o\,I}$	Static load regulation		$V_{i\,nom}$, $I_o = 0 - I_{o\,nom}$		30	50		40	60		50	120	
$v_{o\,d}$	Dynamic load regulation	Voltage deviat.	$V_{i\,nom}$ $I_{o\,nom} \leftrightarrow {}^1/_3\, I_{o\,nom}$ IEC/EN 61204		140			140			180		
t_d		Recovery time			60			60			60		µs
α_{Vo}	Temperature coefficient $\Delta V_o/\Delta T_C$ ($T_{C\,min}$ to $T_{C\,max}$)		$V_{i\,min} - V_{i\,max}$ $I_o = 0 - I_{o\,nom}$			±3			±4			±5	mV/K
						±0.02			±0.02			±0.02	%/K

[1] Output set to 15 V with R-input.

Table 3d: Output data of PSS models. General conditions as per table 3a

Output				PSS369			PSS489			Unit
Characteristics			Conditions	min	typ	max	min	typ	max	
V_o	Output voltage		$V_{i\,nom}$, $I_{o\,nom}$	35.78		36.22	47.71		48.29V	
I_o	Output current		$V_{i\,min} - V_{i\,max}$ $T_{C\,min} - T_{C\,max}$	0		9	0		9	A
I_{oL}	Output current limit			9		11.25	9		11.25	
v_o	Output voltage noise	Switching freq.	$V_{i\,nom}$, $I_{o\,nom}$ IEC/EN 61204 BW = 20 MHz		35	60		35	60	mV_{pp}
		Total incl. spikes			39	64		39	64	
$\Delta V_{o\,V}$	Static line regulation		$V_{i\,min} - V_{i\,max}$, $I_{o\,nom}$		120	250		150	350	mV
$\Delta V_{o\,I}$	Static load regulation		$V_{i\,nom}$, $I_o = 0 - I_{o\,nom}$		60	120		70	150	
$v_{o\,d}$	Dynamic load regulation	Voltage deviat.	$V_{i\,nom}$ $I_{o\,nom} \leftrightarrow {}^1/_3\, I_{o\,nom}$ IEC/EN 61204		200			200		
t_d		Recovery time			70			70		µs
α_{Vo}	Temperature coefficient $\Delta V_o/\Delta T_C$ ($T_{C\,min}$ to $T_{C\,max}$)		$V_{i\,min} - V_{i\,max}$ $I_o = 0 - I_{o\,nom}$			±5			±10	mV/K
						±0.02			±0.02	%/K

Table 4a: Output data of PSK models. General conditions as per table 3a

Output				PSK3E25			PSK5A16			PSK5A20			PSK5A25			Unit
Characteristics			Conditions	min	typ	max	min	typ	max	min	typ	max	min	typ	max	
V_o	Output voltage		$V_{i\,nom}$, $I_{o\,nom}$	3.25		3.35	5.07		5.13	5.07		5.13	5.07		5.13	V
I_o	Output current		$V_{i\,min} - V_{i\,max}$ $T_{C\,min} - T_{C\,max}$	0		25	0		16	0		20			25	A
I_{oL}	Output current limit			25		31.5	16		20	20		25	25		31.5	
v_o	Output voltage noise	Switching freq.	$V_{i\,nom}$, $I_{o\,nom}$ IEC/EN 61204 BW = 20 MHz		20	40		20	40		20	40		20	40	mV_{pp}
		Total incl.spikes			24	44		24	44		24	44		24	44	
$\Delta V_{o\,V}$	Static line regulation		$V_{i\,min} - V_{i\,max}$, $I_{o\,nom}$		15	35		15	35		15	35		15	35	mV
$\Delta V_{o\,I}$	Static load regulation		$V_{i\,nom}$, $I_o = 0 - I_{o\,nom}$		10	25		10	25		10	25		10	25	
$v_{o\,d}$	Dynamic load regulation	Voltage deviat.	$V_{i\,nom}$ $I_{o\,nom} \leftrightarrow {}^1/_3\, I_{o\,nom}$ IEC/EN 61204		70			70			70			70		
t_d		Recovery time			40			40			40			40		µs
α_{Vo}	Temperature coefficient $\Delta V_o/\Delta T_C$ ($T_{C\,min}$ to $T_{C\,max}$)		$V_{i\,min} - V_{i\,max}$ $I_o = 0 - I_{o\,nom}$			±1			±1			±1			±1	mV/K
						±0.02			±0.02			±0.02			±0.02	%/K

Table 4b: Output data of PSK models. General conditions as per table 3a

Output				PSK1216			PSK1220			PSK1216 [1]			PSK1220 [1]			Unit
Characteristics			Conditions	min	typ	max	min	typ	max	min	typ	max	min	typ	max	
V_o	Output voltage		$V_{i\,nom}$, $I_{o\,nom}$	11.93		12.07	11.93		12.07	14.91		15.09	14.91		15.09	V
I_o	Output current		$V_{i\,min} - V_{i\,max}$ $T_{C\,min} - T_{C\,max}$	0		16	0		20	0		16			20	A
I_{oL}	Output current limit			16		20	20		25	16		20	20		25	
v_o	Output voltage noise	Switching freq.	$V_{i\,nom}$, $I_{o\,nom}$ IEC/EN 61204 BW = 20 MHz		25	45		25	45		30	50		30	50	mV_{pp}
		Total incl. spikes			29	49		29	49		34	54		34	54	
$\Delta V_{o\,V}$	Static line regulation		$V_{i\,min} - V_{i\,max}$, $I_{o\,nom}$		40	70		40	70		50	80		50	80	mV
$\Delta V_{o\,I}$	Static load regulation		$V_{i\,nom}$, $I_o = 0 - I_{o\,nom}$		30	50		30	50		35	55		30	55	
$v_{o\,d}$	Dynamic load regulation	Voltage deviat.	$V_{i\,nom}$ $I_{o\,nom} \leftrightarrow {}^1/_3\, I_{o\,nom}$ IEC/EN 61204		140			140			150			150		
t_d		Recovery time			60			60			60			60		µs
α_{Vo}	Temperature coefficient $\Delta V_o/\Delta T_C$ ($T_{C\,min}$ to $T_{C\,max}$)		$V_{i\,min} - V_{i\,max}$ $I_o = 0 - I_{o\,nom}$			±3			±3			±4			±4	mV/K
						±0.02			±0.02			±0.02			±0.02	%/K

[1] Output set to 15 V with R-input.

Table 4c: Output data of PSK models. General conditions as per table 3a

Output				PSK2416			PSK2420			PSK3616			PSK3620			Unit
Characteristics			Conditions	min	typ	max	min	typ	max	min	typ	max	min	typ	max	
V_o	Output voltage		$V_{i\,nom}$, $I_{o\,nom}$	23.86		24.14	23.86		24.14	35.78		36.22	35.78		36.22	V
I_o	Output current		$V_{i\,min} - V_{i\,max}$ $T_{C\,min} - T_{C\,max}$	0		16	0		20	0		16			20	A
I_{oL}	Output current limit			16		20	20		25	16		20	20		25	
v_o	Output voltage noise	Switching freq.	$V_{i\,nom}$, $I_{o\,nom}$ IEC/EN 61204 BW = 20 MHz		30	60		30	60		35	60		35	60	mV_{pp}
		Total incl. spikes			34	64		34	64		39	64		39	64	
$\Delta V_{o\,V}$	Static line regulation		$V_{i\,min} - V_{i\,max}$, $I_{o\,nom}$		80	170		80	170		120	250		120	250	mV
$\Delta V_{o\,I}$	Static load regulation		$V_{i\,nom}$, $I_o = 0 - I_{o\,nom}$		50	120		50	120		60	200		60	200	
$v_{o\,d}$	Dynamic load regulation	Voltage deviat.	$V_{i\,nom}$ $I_{o\,nom} \leftrightarrow {}^1/_3\, I_{o\,nom}$ IEC/EN 61204		180			500			200			200		
t_d		Recovery time			60			2000			70			70		µs
α_{Vo}	Temperature coefficient $\Delta V_o/\Delta T_C$ ($T_{C\,min}$ to $T_{C\,max}$)		$V_{i\,min} - V_{i\,max}$ $I_o = 0 - I_{o\,nom}$			±5			±5			±8			±8	mV/K
						±0.02			±0.02			±0.02			±0.02	%/K

Table 4d: Output data of PSK models. General conditions as per table 3a

Output				PSK1212			PSK1212 [1]			PSK2412			Unit
Characteristics			Conditions	min	typ	max	min	typ	max	min	typ	max	
V_o	Output voltage		$V_{i\,nom}$, $I_{o\,nom}$	11.93		12.07	14.91		15.09	23.86		24.14	V
I_o	Output current		$V_{i\,min} - V_{i\,max}$ $T_{C\,min} - T_{C\,max}$	0		12	0		12	0		12	A
I_{oL}	Output current limit			12		15	12		15	12		15	
v_o	Output voltage noise	Switching freq.	$V_{i\,nom}$, $I_{o\,nom}$ IEC/EN 61204 BW = 20 MHz		25	50		30	60		35	60	mV_{pp}
		Total incl. spikes			29	54		34	64		39	65	
$\Delta V_{o\,V}$	Static line regulation		$V_{i\,min} - V_{i\,max}$, $I_{o\,nom}$		40	70		50	80		80	170	mV
$\Delta V_{o\,I}$	Static load regulation		$V_{i\,nom}$, $I_o = 0 - I_{o\,nom}$		30	50		40	60		50	120	
$v_{o\,d}$	Dynamic load regulation	Voltage deviat.	$V_{i\,nom}$ $I_{o\,nom} \leftrightarrow {}^1/_3\, I_{o\,nom}$ IEC/EN 61204		140			140			180		
t_d		Recovery time			60			60			60		µs
α_{Vo}	Temperature coefficient $\Delta V_o/\Delta T_C$ ($T_{C\,min}$ to $T_{C\,max}$)		$V_{i\,min} - V_{i\,max}$ $I_o = 0 - I_{o\,nom}$			±3			±4			±5	mV/K
						±0.02			±0.02			±0.02	%/K

[1] Output set to 15 V with R-input

Table 4e: Output data of PSK models. General conditions as per table 3a

Output				PSK3612			PSK4812			Unit
Characteristics			Conditions	min	typ	max	min	typ	max	
V_o	Output voltage		$V_{i\,nom}$, $I_{o\,nom}$	35.78		36.22	47.71		48.29V	
I_o	Output current		$V_{i\,min} - V_{i\,max}$ $T_{C\,min} - T_{C\,max}$	0		12	0		12	A
I_{oL}	Output current limit			12		15	12		15	
v_o	Output voltage noise	Switching freq.	$V_{i\,nom}$, $I_{o\,nom}$ IEC/EN 61204 BW = 20 MHz		35	60		35	60	mV_{pp}
		Total incl. spikes			39	64		39	64	
$\Delta V_{o\,V}$	Static line regulation		$V_{i\,min} - V_{i\,max}$, $I_{o\,nom}$		120	250		150	350	mV
$\Delta V_{o\,l}$	Static load regulation		$V_{i\,nom}$, $I_o = 0 - I_{o\,nom}$		60	120		70	150	
$v_{o\,d}$	Dynamic load regulation	Voltage deviat.	$V_{i\,nom}$ $I_{o\,nom} \leftrightarrow {}^1/_3\, I_{o\,nom}$ IEC/EN 61204		200			200		
t_d		Recovery time			70			70		µs
α_{Vo}	Temperature coefficient $\Delta V_o/\Delta T_C$ ($T_{C\,min}$ to $T_{C\,max}$)		$V_{i\,min} - V_{i\,max}$ $I_o = 0 - I_{o\,nom}$			±5			±10	mV/K
						±0.02			±0.02	%/K

Output Voltage Regulation

The dynamic load regulation is shown in fig. 2

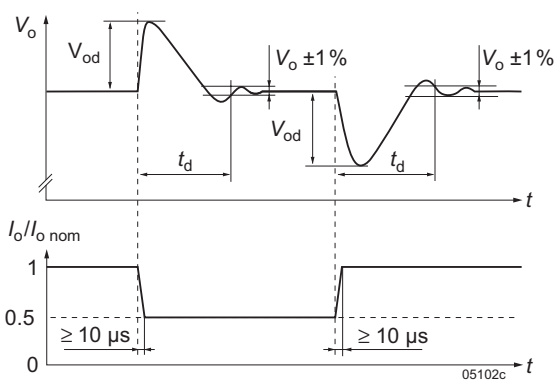

Fig. 3
Dynamic load regulation.

Output Protection

A voltage suppressor diode, which in worst case conditions fails into a short-circuit, protects the output against an internally generated overvoltage. Such an overvoltage could occur due to a failure of either the control circuit or the switching transistor. The output protection is not designed to withstand externally applied overvoltages.

Current Limitation

A constant current limitation circuit holds the output current I_o almost constant in the area of 100 to 120% of $I_{o\,nom}$, when an overload or a short-circuit is applied to the output. It acts self-protecting and recovers – in contrary to the fold back method – automatically after removal of the overload or short-circuit condition.

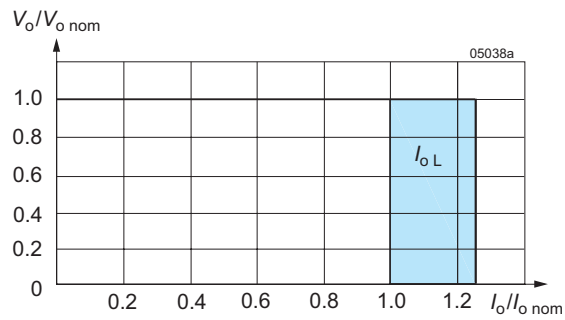

Fig. 4
Overload, short-circuit behaviour V_o versus I_o.

Parallel and Series Connection

Outputs of equal nominal voltage may be parallel-connected. Interconnect the current sharing pins T (pin 22) for even distribution of the output current; *see Auxiliary Functions*.

Outputs can be series-connected with any other regulator, provided that the regulators are powered by electrically isolated source voltages. In series connection the maximum output current is limited by the lowest current limitation.

Thermal Considerations and Protection

When a switching regulator is located in free, quasi-stationary air (convection cooling) at a temperature $T_{A\,max}$ and is operated at its nominal output current $I_{o\,nom}$, the case temperature T_C can rise over $T_{C\,max}$ after the warm-up phase. T_C is measured at the measuring point of case temperature; see *Mechanical Data*.

Under practical operating conditions, the ambient temperature T_A may exceed $T_{A\,max}$, provided that additional measures (heat sink, forced cooling, etc.) are taken to ensure that the case temperature T_C does not exceed its maximum value.

The regulater is protected by an internal temperature sensor, which inhibits the output above $T_{C\,max}$. The output automatically recovers, when the temperature drops below $T_{C\,max}$.

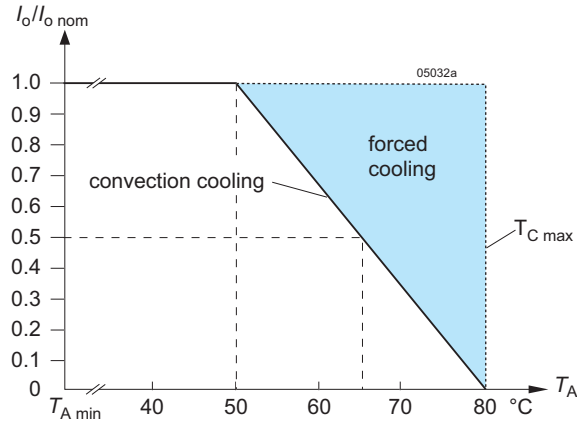

Fig. 5a
Output current derating versus temperature (models -2)

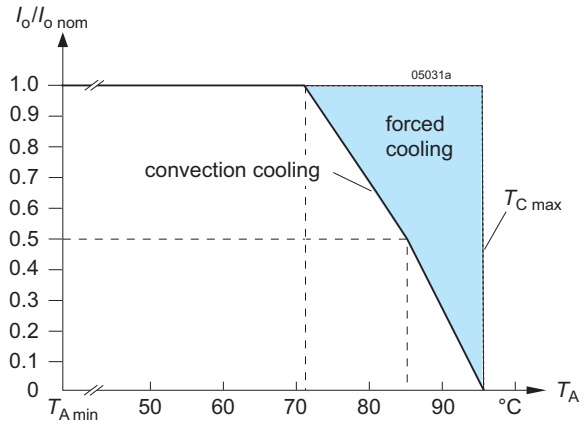

Fig. 5b
Output current derating versus temp. (models -7 or -9)

Auxiliary Functions

Inhibit (Remote On / Off)

The inhibit input allows to enable or disable the output with a control signal. In systems with several regulations, this feature can be used to control the activation sequence of the

Table 5: Inhibit characteristics

Characteristics			Conditions	min	typ	max	Unit
V_{inh}	Inhibit input voltage	V_o = on	$V_{i\,min} - V_{i\,max}$ $T_{C\,min} - T_{C\,max}$	–50		+0.8	V
		V_o = off		+2.4		+50	
t_r	Switch-on time		$V_i = V_{i\,nom}$ $R_L = V_{o\,nom}/I_{o\,nom}$		130		ms
t_f	Switch-off time				25		
$I_{i\,inh}$	Input current when inhibited		$V_i = V_{i\,nom}$		25		mA

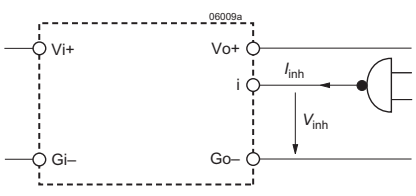

Fig. 6
Specification of the inhibit signal (typical)

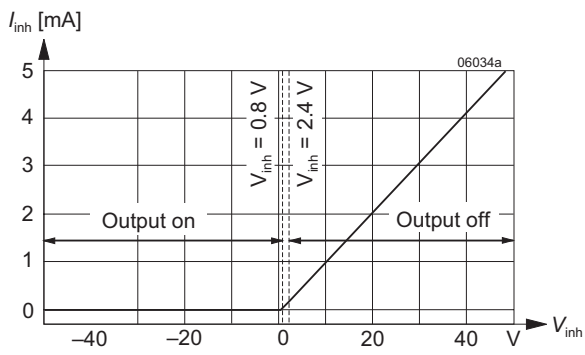

Fig. 7
Specification of the inhibit signal (typical)

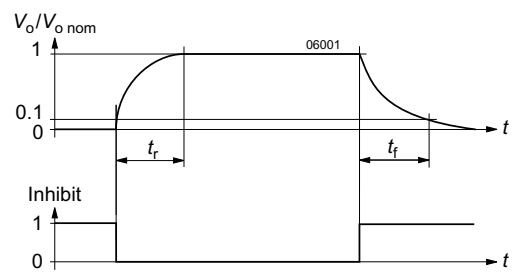

Fig. 8
Output response as a function of the inhibit signal

regulators by a logic signal (TTL, C-MOS, etc.). An output voltage overshoot will not occur, when switching on or off.

The inhibit signal is referenced to the S– (pin 18). The signal i and the switching times are specified in table 5, fig. 6 to 8.

Note: With open i input, the output is enabled.

Sense Lines

This feature enables compensation of the voltage drop across the connector contacts and the load lines. If the sense lines are connected at the load rather than directly at the connector, the user must ensure that $V_{o\,max}$ (between Vo+ and Go–) is not exceeded.

Applying generously dimensioned cross-section load leads reduces the voltage drop. To minimize noise pick-up, the sense lines should be wired in parallel or twisted.

To ensure correct operation, both sense lines must be connected to their respective power output. The voltage difference between any sense line and its respective power output pin (as measured on the connector) should not exceed the values given in table 6.

Note: Sense lines should always be connected! It is recommended to connect the sense lines directly at the female connector.

Table 6: Allowed voltage compensation using sense lines

Nominal output voltage	Total voltage difference between both sense lines and their respective output	Voltage difference between Go– and S–
3.3 V, 5.1 V	≤0.5 V	≤0.25 V
12 – 48 V	≤1.0 V	≤0.25 V

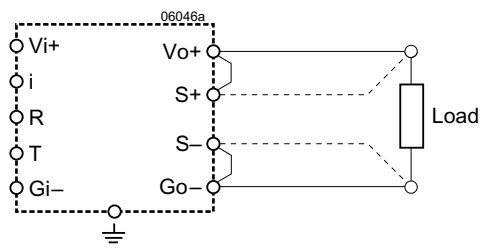

Fig. 9
Sense lines connection

Current Sharing

For parallel operation of several regulators, interconnect all T-pins to ensure that the output currents are evenly distributed. This feature improves transient load performance and increases system reliability. All paralleled regulators should be supplied by equal input voltage (V_i). The output lines should exhibit equal length and cross section to provide equal voltage drop.

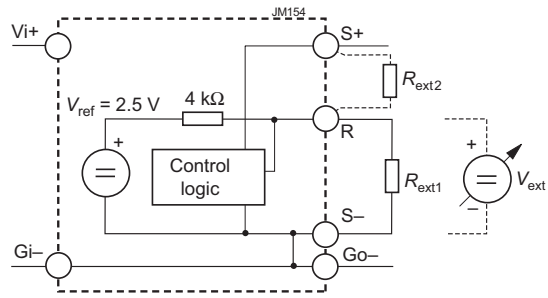

Fig. 10
Voltage adjustment via R-input

R Control (Output Voltage Adjust)

Note: With open R input, $V_o \approx V_{o\,nom}$.

The output voltage V_o can either be adjusted with an external voltage source (V_{ext}) or with an external resistor (R_{ext1} or R_{ext2}). The adjustment range is approx. 0 – $V_{o\,max}$. The minimum differential voltage $\Delta V_{io\,min}$ between input and output (see *Electrical Input Data*) should be maintained.

a) V_o = 0 – $V_{o\,max}$, using V_{ext} between R and S–:

$$V_{ext} \approx 2.5\,V \cdot \frac{V_o}{V_{o\,nom}} \qquad V_o \approx V_{o\,nom} \cdot \frac{V_{ext}}{2.5\,V}$$

Caution: To prevent damage V_{ext} should not exceed 20 V, nor be negative.

b) V_o = 0 to $V_{o\,nom}$, using R_{ext1} between R and S–:

$$R_1 \approx \frac{4000\,\Omega \cdot V_o}{V_{o\,nom} - V_o} \qquad V_o \approx \frac{V_{o\,nom} \cdot R_{ext1}}{R_1 + 4000\,\Omega}$$

c) $V_o = V_{o\,nom}$ to $V_{o\,max}$, using R_{ext2} between R and S+:

$$R_2 \approx \frac{4000\,\Omega \cdot V_o \cdot (V_{o\,nom} - 2.5\,V)}{2.5\,V \cdot (Vo - Vo\,nom)}$$

$$V_o \approx \frac{V_{o\,nom} \cdot 2.5\,V \cdot R_{ext2}}{2.5\,V \cdot (R_2 + 4000\,\Omega) - V_{o\,nom} \cdot 4000\,\Omega}$$

Caution: R_{ext} should never be less than 47 kΩ.

Test Sockets

Test sockets (pin ∅ = 2 mm) for measuring the output voltage V_o at the sense lines, are located at the front side of the regulator. The test sockets are protected by a series resistor.

LED Output Voltage Indicator

A green LED indicator shines when the output voltage is present.

Table 7: Maximum adjustable output voltage

$V_{o\,nom}$	Nominal Output Volt.	Conditions	3.3 V min	3.3 V typ	5.1 V min	5.1 V typ	12/15 V min	12/15 V typ	24 V min	24 V typ	36 V min	36 V typ	48 V min	48 V typ	Unit
$V_{o\,max}$	Maximum adjustable output voltage with R-input	$V_{i\,nom}$, $I_{o\,nom}$			5.6		16		26		42.5		52.8		V

Electromagnetic Compatibility (EMC)

Electromagnetic Immunity

General condition: Case not earthed.

Table 8: Immunity type tests

Phenomenon	Standard	Class Level	Coupling mode [1]	Value applied	Waveform	Source imped.	Test procedure	In oper.	Perf.-crit. [4]
Direct transients [2]	IEC 60571-1	[2]	i/c, +i/–i	800 V_p	100 µs	100 Ω	1 pos. and 1 neg. voltage surge per coupling mode	yes	B
				1500 V_p	50 µs				
				3000 V_p	5 µs				
				4000 V_p	1 µs				
				7000 V_p	100 ns				
Electrostatic discharge (to case)	IEC/EN 61000-4-2	4 [2]	contact discharge	8000 V_p	1/50 ns	330 Ω	10 positive and 10 negative discharges	yes	A
			air discharge	15000 V_p					
Electromagnetic field	IEC/EN 61000-4-3	3 [2] 2 [3]	antenna	10 V/m [2] 3 V/m [3]	AM 80% 1 kHz		80 – 1000 MHz	yes	A
		3 [2]	antenna	10 V/m	50% duty cycle, 200 Hz rep. rate	n.a.	900 ±5 MHz	yes	A
Electrical fast transients/burst	IEC/EN 61000-4-4	3 [2] 2 [3]	i/c, +i/–i	2000 V_p [2] 1000 V_p [3]	bursts of 5/50 ns 5 kHz rep. rate transients with 15 ms burst duration and 300 ms period	50 Ω	60 s positive 60 s negative transients per coupling mode	yes	A
		4 [2] 3 [3]		4000 V_p [2] 2000 V_p [3]					B [5]
Surges	IEC/EN 61000-4-5	3 [2] 2 [3]	i/c	2000 V_p [2] 1000 V_p [3]	1.2/50 µs	12 Ω	5 pos. and 5 neg. surges per coupling mode	yes	A
		3 [2] 1 [3]	+i/–i	2000 V_p [2] 500 V_p [3]	1.2/50 µs	2 Ω			
Conducted disturbances	IEC/EN 61000-4-6	3 [2] 2 [3]	i, o, signal wires	10 VAC [2] 3 VAC [3]	AM 80% 1 kHz	150 Ω	0.15 – 80 MHz	yes	A

[1] i = input, o = output, c = case
[2] Not applicable for -2 models
[3] Valid for -2 models
[4] A = Normal operation, no deviation from specifications, B = Normal operation, temporary loss of function or deviation from specs possible
[5] With option C, manual reset might be necessary.

Electromagnetic Emissions

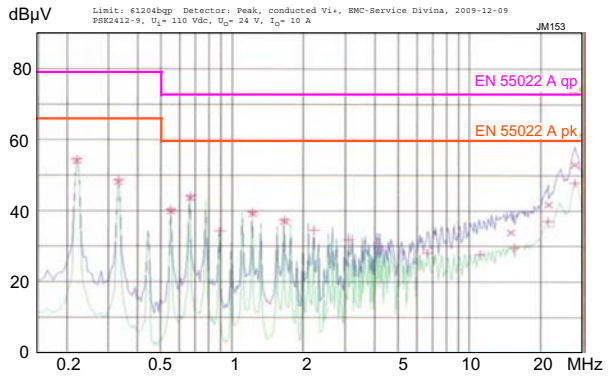

Fig. 11
Typical conducted disturbance voltage (quasi-peak and avrage) according to EN 55011/22 measured at $V_{i\ nom}$ = 110 V and I_o = 10 A (PSK2412-9).

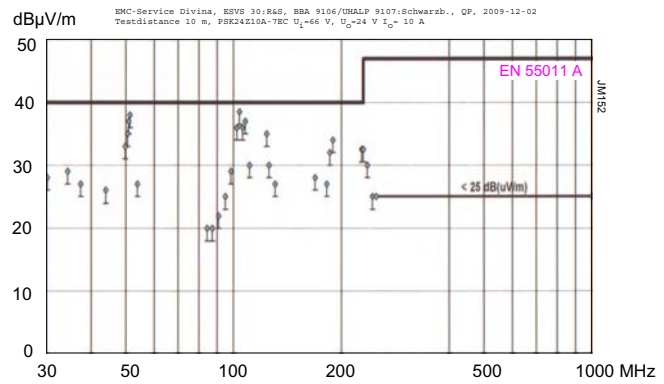

Fig. 12
Typ. radiated disturbance voltage (quasi-peak) in 10 m distance according to EN 55011/22 measured at $V_{i\ nom}$ = 110 V and I_o = 10 A (PSK2412-9).

Immunity to Environmental Conditions

Table 9: Mechanical and climatic stress

Test	Method	Standard	Test Conditions		Status
Cab	Damp heat steady state	IEC/EN 60068-2-78 MIL-STD-810D section 507.2	Temperature: Relative humidity: Duration:	$40^{\pm 2}$ °C $93^{+2/-3}$ % 56 days	Regulator not operating
Db	Damp heat test, cyclic [2]	EN 50155:2007, clause 12.2.5 IEC/EN 60068-2-30	Temperature: Cycles (respiration effect): Duration:	55 °C and 25 °C 2 2 × 24 h	Converter not operating
--	Salt mist test sodium chloride (NaCl) solution	EN 50155:2007 sect. 12.2.10 class ST2	Temperature: Duration:	$35^{\pm 2}$ °C 16 h	Regulator not operating
Ea	Shock (half-sinusoidal)	IEC/EN 60068-2-27 MIL-STD-810D section 516.3	Acceleration amplitude: Bump duration: Number of bumps:	50 g_n = 490 m/s^2 11 ms 18 (3 each direction)	Regulator operating
Eb	Bump (half-sinusoidal)	IEC/EN 60068-2-29 MIL-STD-810D section 516.3	Acceleration amplitude: Bump duration: Number of bumps:	25 g_n = 245 m/s^2 11 ms 6000 (1000 each direction)	Regulator operating
Fc	Vibration (sinusoidal)	IEC/EN 60068-2-6 MIL-STD-810D section 514.3	Acceleration amplitude: Frequency (1 Oct/min): Test duration:	0.35 mm (10 – 60 Hz) 5 g_n = 49 m/s^2 (60 – 2000 Hz) 10 – 2000 Hz 7.5 h (2.5 h each axis)	Regulator operating
Fda	Random vibration wide band Reproducibility high	IEC/EN 60068-2-35 DIN 40046 part 23	Acceleration spectral density: Frequency band: Acceleration magnitude: Test duration:	0.05 g^2/Hz 20 – 500 Hz 4.9 $g_{n\,rms}$ 3 h (1 h each axis)	Regulator operating
--	Shock	EN 50155:2007 clause 12.2.11 EN 61373 sect. 10, class B, body mounted [1]	Acceleration amplitude: Bump duration: Number of bumps:	5.1 g_n 30 ms 18 (3 in each direction)	Regulator operating
--	Simulated long life testing at increased random vibration levels	EN 50155:2007 clause 12.2.11 EN 61373 sect. 8 and 9, class B, body mounted [1]	Acceleration spectral density: Frequency band: Acceleration magnitude: Test duration:	0.02 g_n^{2}/Hz 5 – 150 Hz 0.8 $g_{n\,rms}$ 15 h (5 h in each axis)	Regulator operating

[1] Body mounted = chassis of a railway coach
[2] Models with version V104 or later

Temperatures

Table 10: Temperature specifications, valid for an air pressure of 800 - 1200 hPa (800 - 1200 mbar)

Temperature			-2		-7 (Option)		-9		
Characteristics		Conditions	min	max	min	max	min	max	Unit
T_A	Ambient temperature [1]	Regulator operating	–10	50	–25	71	–40	71	°C
T_C	Case temperature		–10	80	–25	95	–40	95	
T_S	Storage temperature [1]	Non operational	–25	100	–40	100	–55	100	

[1] See *Thermal Considerations* and *Overtemperature Protection.*

Reliability

Table 11: MTBF and device hours

MTBF	Ground Benign	Ground Fixed		Ground Mobile	Device Hours [1]
MTBF acc. to MIL-HDBK-217F	T_C = 40 °C	T_C = 40 °C	T_C = 70 °C	T_C = 50 °C	
	335 000 h	138 000 h	35 000 h	33 000 h	2 100 000 h

[1] Statistical values, based on an average of 4300 working hours per year and in general field use

Mechanical Data

PSS Models

The regulators are designed to be inserted into a rack according to IEC 60297-3. Dimensions in mm.

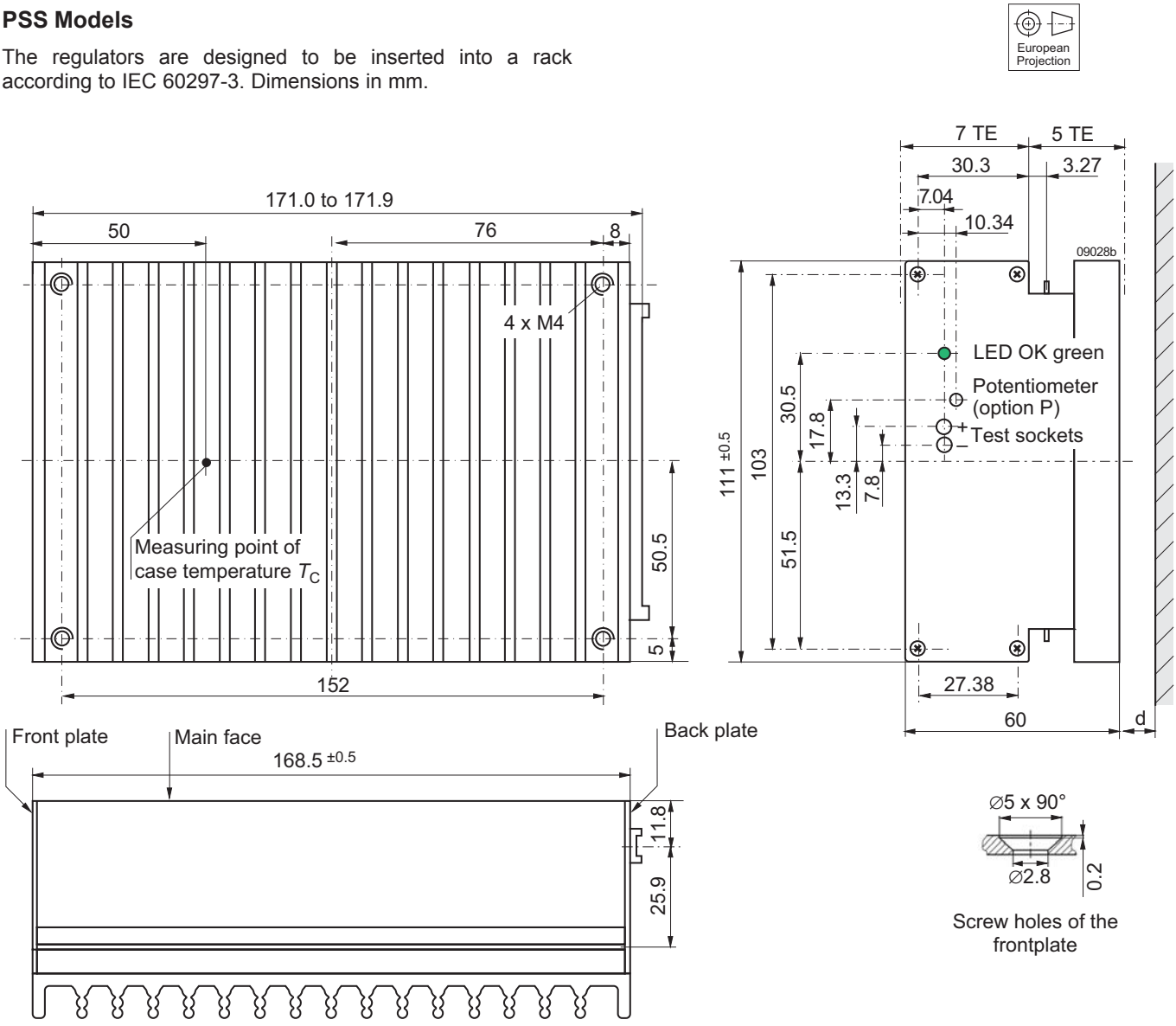

Fig. 13
Case S01 for PSS models; weight 1.3 kg
Aluminum, fully enclosed, black finish EP power-coated, and self cooling.

Notes:

- d ≥15 mm, recommended minimum distance to next part to ensure proper air circulation at full output power.
- Free air locations: the regulator should be mounted with its fins in vertical position to achieve a maximum air flow through heat sink.

PSK Models

The regulators are designed to be inserted into a DIN-rack according to IEC 60297-3. Dimensions in mm.

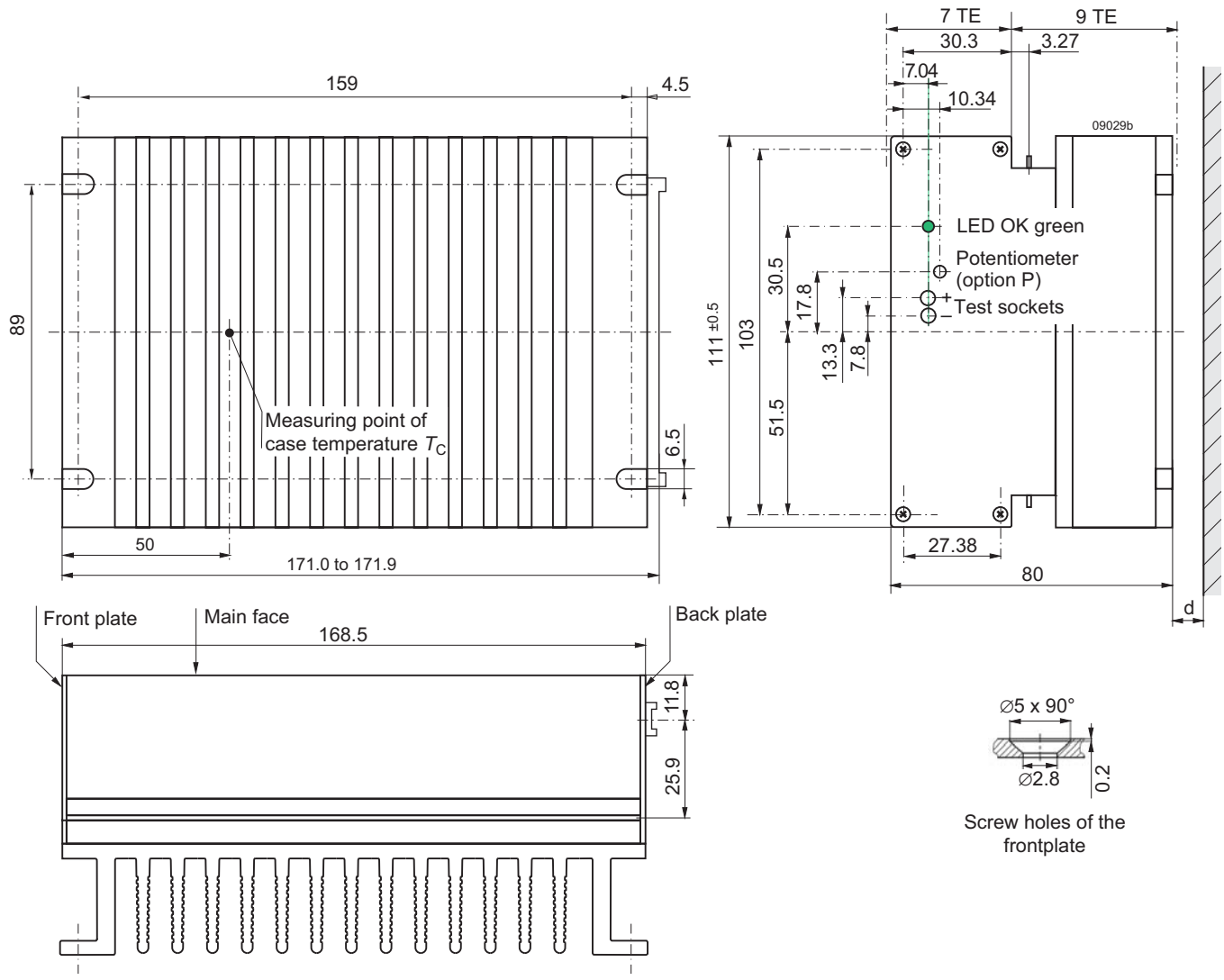

Fig. 14
Case K01 for PSK models, weight 1.6 kg
Aluminum, fully enclosed, black finish EP powder-coated, and self cooling.

Notes:

- d ≥15 mm, recommended minimum distance to next part to ensure proper air circulation at full output power.
- Free air locations: the regulator should be mounted with its fins in vertical position to achieve a maximum air flow through heat sink.

Option B, B1

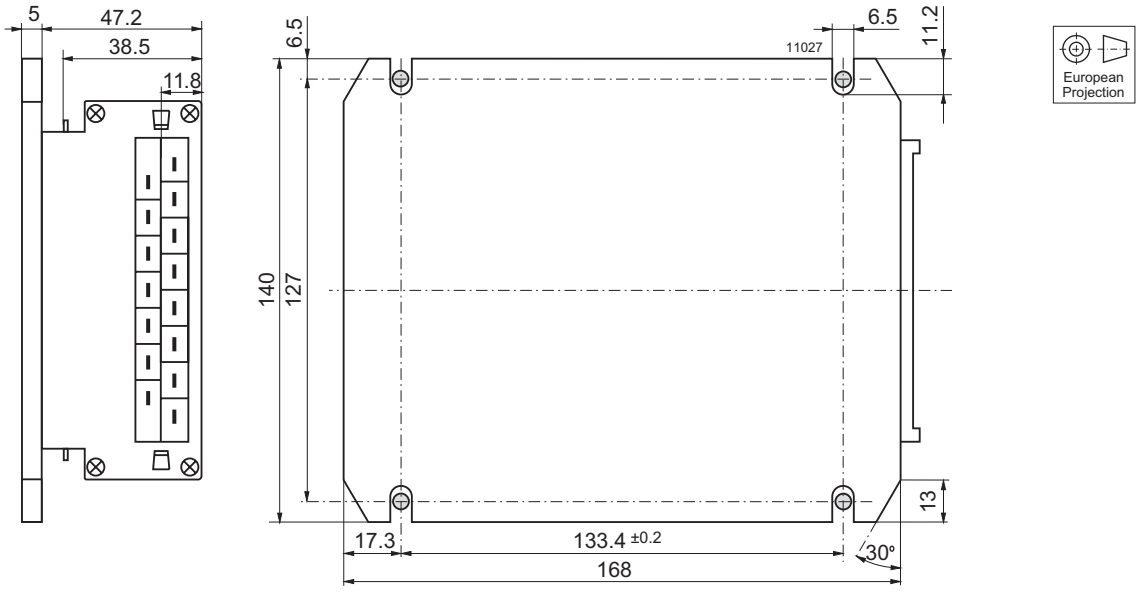

Fig. 15
Option B, large cooling plate
Weight: 1.3 kg

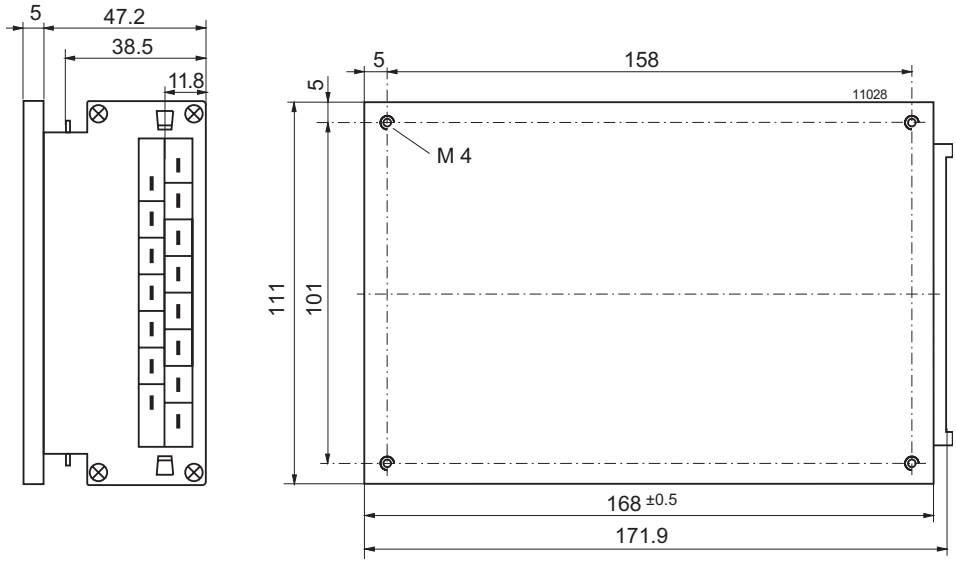

Fig. 16
Option B1, small cooling plate
Weight: 1.2 kg

Safety and Installation Instructions

Connector Pin Allocation

The connector pin allocation table defines the electrical potentials and the physical pin positions on the H15 or H15S4 connector. Pin 24 (protective earth) is a leading pin, which provides electrical contact first. The regulators should only be wired via the female connector H15 (according to DIN 41612) to ensure requested safety!

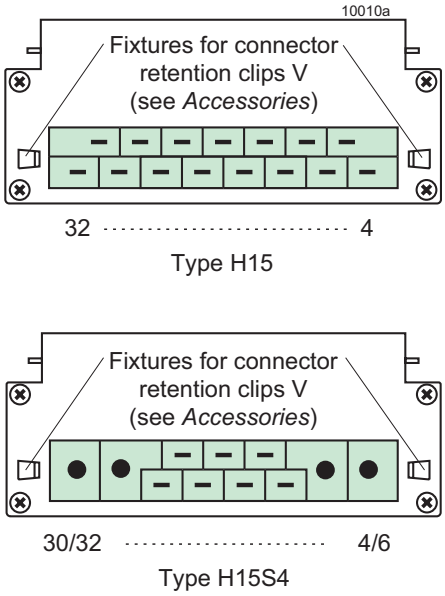

Fig. 17
View of H15 and H15S4 male connector

Table 12: H15 and H15S4 connector pin allocation

Electrical Determination	Type H15		Type H15S4	
	Pin no.	Ident.	Pin no.	Ident.
Output voltage (positive)	4	Vo+	4/6	Vo+
Output voltage (positive)	6	Vo+		
Output voltage (negative)	8	Go–	8/10	Go–
Output voltage (negative)	10	Go–		
Crowbar trigger input (option C)	12	C	12	C
Inhibit input	14	i	14	i
R-input (output voltage programming)[1]	16	R[1]	16	R[1]
Sense line (negative)	18	S–	18	S–
Sense line (positive)	20	S+	20	S+
Current sharing control input	22	T	22	T
Protective ground (leading pin)	24	⏚	24	⏚
Input voltage (negative)	26	Gi–	26/28	Gi–
Input voltage (negative)	28	Gi–		
Input voltage (positive)	30	Vi+	30/32	Vi+
Input voltage (positive)	32	Vi+		

[1] Not connected with option P

Installation Instruction

Installation of the regulators must strictly follow the national safety regulations in compliance with the enclosure, mounting, creepage, clearance, casualty, markings, and segregation requirements of the end-use application.

The input and the output circuit are not separated. The negative path is internally interconnected.

The regulators should be connected to a secondary circuit. Make sure that a regulator failure (e.g. by an internal short-circuit) does not result in a hazardous condition.

Do not open the regulator!

Standards and Approvals

The regulators are safety-approved to UL/CSA 60950-1 2nd Ed. and IEC/EN 60950-1 2nd Ed. They correspond to Class I equipment (with case connected to ground).

The regulators have been evaluated for:

- Building in
- No insulation from input to output.
- The use in a pollution degree 2 environment
- Connecting the input to a secondary circuit, which is subject to a maximum transient rating of 1500 V.

The switching regulators are subject to manufacturing surveillance in accordance with the above mentioned standards and with ISO 9001:2008.

Cleaning Liquids

In order to avoid possible damage, any penetration of cleaning fluids must be prevented, since the regulators are not hermetically sealed.

Protection Degree

The protection degree is IP 30 (IP 20, if equipped with option P). It applies only, if the regulator is plugged-in or the matching female connector is properly attached.

Isolation and Protective Earth

The resistance of the protective earth connection (max. 0.1 Ω) is tested. The electric strength between input interconnected with output and case is tested with 1500 VDC ≥1 s (all models with version V103 or later). Models with $V_{i\,max}$ = 144 V and V104 or later are tested with 2200 VDC ≥1 s.

These tests are performed in the factory as routine test in accordance with EN 50116 and IEC/EN 60950. The electric strength test should not be repeated by the customer. BelPS Company does not honor warranty claims resulting from incorrect electric strength tests.

Railway Application

The regulators have been developed observing the railway standards EN 50155 and EN 50121. All boards are coated with a protective lacquer.

Description of Options

-7 Temperature Range

This option defines a restricted temperature range as specified in table 10 (not for new designs).

P Potentiometer to Adjust the Output

Note: Option P is not recommended for regulators operated in parallel connection.

Option P excludes the R function; the R-input (pin 16) should be left open-circuit. The output voltage V_o can be adjusted in the range 90 – 110% of $V_{o\,nom}$.

However, the minimum differential voltage $V_{i\,max}$ between input and output as specified in *Electrical Input Data* should be respected.

E Inrush Current Limitation

Note: This option requires an increased minimum input voltage $V_{i\,max}$ of up to 1 V, dependent upon input range.

In regulators without option E, after application of the input supply the inrush current is limited by parasitic components of the voltage source and the regulator input only. The regulator input exhibits a very low impedance, and when driven from a low impedance source, for example a battery, the inrush current can peak at several orders of magnitude above the continuous input current.

Option E dramatically reduces this peak current and is recommended for any application to protect series elements such as fuses, switches, or circuit brakers. The start-up circuit is bypassed during normal operation.

C Thyristor Crowbar

Note: The crowbar can be reset by removal of the input voltage only. The inhibit signal cannot deactivate the thyristor.

Option C protects the load against power supply malfunction. It is not designed to sink external currents.

As a central overvoltage protection device, the crowbar is usually connected to the external load via distributed inductance of the lines. For this reason, the overvoltage at the load can temporarily exceed the trigger voltage $V_{o\,c}$. Depending on the application, further decentralized over-voltage protection elements may have to be used additionally.

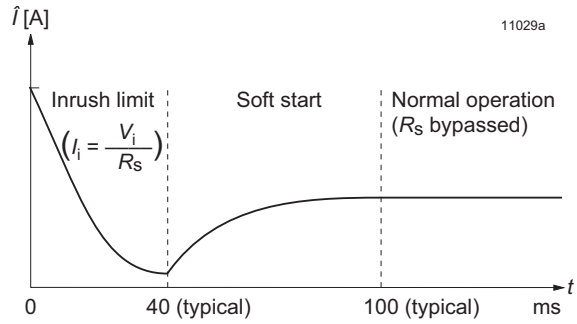

Fig. 18
Option E: Inrush current versus time. R_s is the startup resistor (R_s = 1 Ω for models with $V_{i\,max} \leq 80$ V, R_s = 15 Ω for models with $V_{i\,max} > 80$ V)

A fixed-value monitoring circuit checks the output voltage V_o, and when the trigger voltage $V_{o\,c}$ is reached, the thyristor crowbar triggers and disables the output.

An external connection C (crowbar trigger control) is provided. When crowbar option is used with two or more power supplies in parallel connection, all crowbar trigger terminals (C) should be interconnected. This ensures all crowbar circuits triggering simultaneously, in order to disable all outputs at once. The crowbar trigger voltage is maintained between Vo+ and Go–. To prevent false triggering, the user should ensure that V_o (between Vo+ and Go–) deos not exceed $V_{o\,c}$.

B, B1 Cooling Plate

Where a cooling surface is available, a cooling plate (option B or option B1) can be fitted instead of the standard heatsink. The mounting system must ensure sufficient cooling capacity to guarantee that the maximum case temperature $T_{C\,max}$ is not exceeded. The required cooling capacity can be calculated by the following formula:

$$P_{Loss} = \frac{100\,\% - \eta}{\eta} \cdot (V_o \cdot I_o)$$

G RoHS Compliance

Models with G are RoHS-compliant for all six substances.

Table 13: Crowbar trigger levels

Characteristics		Conditions	PSK5A16 PSK5A20 PSK5A25			PSK1212 PSK1216 PSK1220			PSS249 PSK2412 PSK2416 PSK2420			PSK3612 PSK3616 PSK3620			PSK4812			Unit
			min	typ	max	min	typ	max	min	typ	max	min	typ	max	min	typ	max	
$V_{o\,c}$	Trigger voltage	$T_{C\,min} – T_{C\,max}$ $V_{i\,min} – V_{i\,max}$ $I_o = 0 – I_{o\,nom}$		6.3	6.7		17.8 14.3 [1]	18.9 15.2 [1]		28.9	30.6		47 43 [1]	50 45.5 [1]		63	67	V
t_s	Delay time			1.5			1.5			1.5			1.5			1.5		µs

[1] Models with option P

Accessories

A variety of electrical and mechanical accessories are available including:

- Various front panels for 19" DIN-racks with 3U heigth, 12 or 16 TE, Schroff or Intermas
- Various mating connectors H15 and H15S4 including fast-on, screw, solder, or press-fit terminals, code key system and coding wedges HZZ00202-G
- Pair of connector retention clips HZZ01209-G; see fig. 20
- Connector retention brackets HZZ01216-G; see fig. 22
- Different cable connector housings (cable hoods), including a metallic version for fire protection
- Cage clamp adapter HZZ00144-G; see fig. 23
- Wall-mounting plate K02 HZZ01213, only for models with option B1
- Brackets for DIN-rail and wall mounting HZZ00610
- DIN-rail mounting assembly HZZ0615-G; see fig. 24
- Battery sensors S-KSMH... for using the converter as battery charger. Different cell characteristics can be selected; see *Battery Charging/Temperature Sensor.*

For additional accessory product information, see the accessory data sheet listed with each product series or individual model listing at our web site.

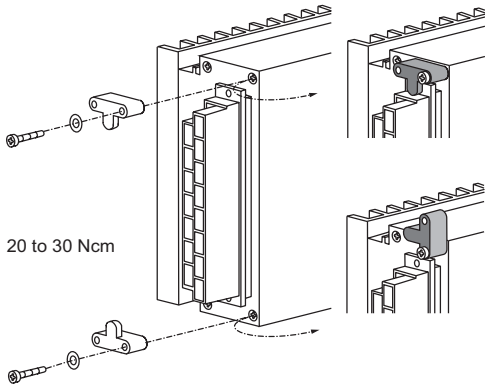

Fig. 22
Connector retention brackets HZZ01216-G

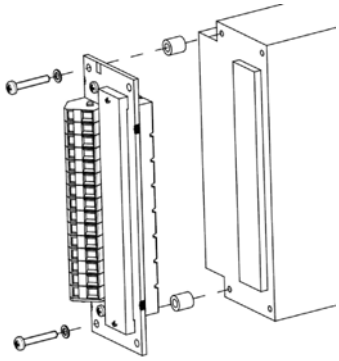

Fig. 23
Cage clamp adapter HZZ00144-G

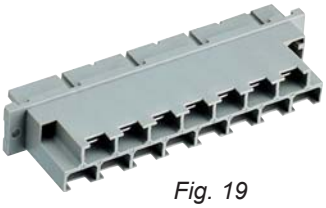

Fig. 19
H15 female connector with code key system

Fig. 20
Connector retention clips HZZ01209-G

Fig. 21
Different front panels

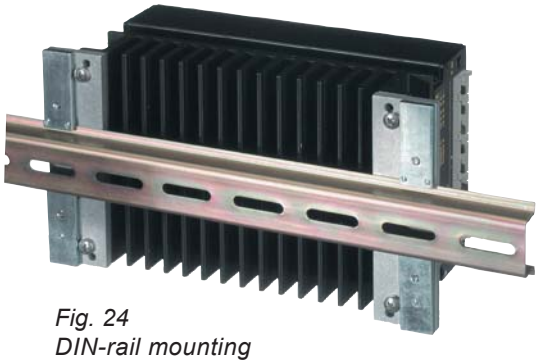

Fig. 24
DIN-rail mounting assembly HZZ0615-G

NUCLEAR AND MEDICAL APPLICATIONS - These products are not designed or intended for use as critical components in life support systems, equipment used in hazardous environments, or nuclear control systems.

TECHNICAL REVISIONS - The appearance of products, including safety agency certifications pictured on labels, may change depending on the date manufactured. Specifications are subject to change without notice.

Mouser Electronics

Authorized Distributor

Click to View Pricing, Inventory, Delivery & Lifecycle Information:

Bel Power Solutions:
PSK3620-7 PSS249-9EG PSK2412-9EG PSK1220-9EG PSS1212-9 PSK3612-9EG PSK2420-9EG PSK4812-9EG PSS2414-2G PSK1212-7E PSK1216-9EG PSS2412-9EG PSK2416-9EG