Datasheet

S3A6 Microcontroller Group

Datasheet

Renesas Synergy™ Platform

Synergy Microcontrollers
S3 Series

All information contained in these materials, including products and product specifications, represents information on the product at the time of publication and is subject to change by Renesas Electronics Corp. without notice. Please review the latest information published by Renesas Electronics Corp. through various means, including the Renesas Electronics Corp. website (http://www.renesas.com).

Renesas Electronics
www.renesas.com

Rev.1.20 Aug 2019

High efficiency 48-MHz Arm® Cortex®-M4 core, 256-KB code flash memory, 32-KB SRAM, Segment LCD Controller, Capacitive Touch Sensing Unit, USB 2.0 Full-Speed Module, 14-bit A/D Converter, 12-bit D/A Converter, security and safety features

Features

■ Arm Cortex-M4 Core with Floating Point Unit (FPU)
- Armv7E-M architecture with DSP instruction set
- Maximum operating frequency: 48 MHz
- Support for 4-GB address space
- Arm Memory Protection Unit (Arm MPU) with 8 regions
- Debug and Trace: ITM, DWT, FPB, TPIU, ETB
- CoreSight™ Debug Port: JTAG-DP and SW-DP

■ Memory
- 256-KB code flash memory
- 8-KB data flash memory (100,000 program/erase (P/E) cycles)
- 32-KB SRAM
- Flash Cache (FCACHE)
- Memory Protection Unit (MPU)
- 128-bit unique ID

■ Connectivity
- USB 2.0 Full-Speed Module (USBFS)
  - On-chip transceiver with voltage regulator
  - Compliant with USB Battery Charging Specification 1.2
- Serial Communications Interface (SCI) × 4
  - UART
  - Simple IIC
  - Simple SPI
- Serial Peripheral Interface (SPI) × 2
- I^2C bus interface (IIC) × 2
- Controller Area Network (CAN) module
- Serial Sound Interface Enhanced (SSIE)

■ Analog
- 14-bit A/D Converter (ADC14)
- 12-bit D/A Converter (DAC12)
- 8-bit D/A Converter (DAC8) ×2 (for ACMPLP)
- Low-Power Analog Comparator (ACMPLP) × 2
- Operational Amplifier (OPAMP) × 4
- Temperature Sensor (TSN)

■ Timers
- General PWM Timer 32-Bit (GPT32) × 2
- General PWM Timer 16-Bit (GPT16) × 6
- Asynchronous General-Purpose Timer (AGT) × 2
- Watchdog Timer (WDT)

■ Safety
- Error Correction Code (ECC) in SRAM
- SRAM parity error check
- Flash area protection
- ADC self-diagnosis function
- Clock Frequency Accuracy Measurement Circuit (CAC)
- Cyclic Redundancy Check (CRC) calculator
- Data Operation Circuit (DOC)
- Port Output Enable for GPT (POEG)
- Independent Watchdog Timer (IWDT)
- GPIO readback level detection
- Register write protection
- Main oscillator stop detection
- Illegal memory access

■ System and Power Management
- Low power modes
- Realtime Clock (RTC) with calendar and Battery Backup support
- Event Link Controller (ELC)
- DMA Controller (DMAC) × 4
- Data Transfer Controller (DTC)
- Key Interrupt Function (KINT)
- Power-on reset
- Low Voltage Detection (LVD) with voltage settings

■ Security and Encryption
- AES128/256
- GHASH
- True Random Number Generator (TRNG)

■ Human Machine Interface (HMI)
- Segment LCD Controller (SLCDC)
  - Up to 38 segments × 4 commons
  - Up to 34 segments × 8 commons
- Capacitive Touch Sensing Unit (CTSU)

■ Multiple Clock Sources
- Main clock oscillator (MOSC)
  (1 to 20 MHz when VCC = 2.4 to 5.5 V)
  (1 to 8 MHz when VCC = 1.8 to 2.4 V)
  (1 to 4 MHz when VCC = 1.6 to 1.8 V)
- Sub-clock oscillator (SOSC) (32.768 kHz)
- High-speed on-chip oscillator (HOCO)
  (24, 32, 48, 64 MHz when VCC = 2.4 to 5.5 V)
  (24, 32, 48 MHz when VCC = 1.8 to 5.5 V)
  (24, 32 MHz when VCC = 1.6 to 5.5 V)
- Middle-speed on-chip oscillator (MOCO) (8 MHz)
- Low-speed on-chip oscillator (LOCO) (32.768 kHz)
- IWDT-dedicated on-chip oscillator (15 kHz)
- Clock trim function for HOCO/MOCO/LOCO
- Clock out support

■ General Purpose I/O Ports
- Up to 84 input/output pins
  - Up to 3 CMOS input
  - Up to 81 CMOS input/output
    - Up to 9 input/output 5-V tolerant
    - Up to 2 high current (20 mA)

■ Operating Voltage
- VCC: 1.6 to 5.5 V

■ Operating Temperature and Packages
- Ta = -40°C to +85°C
  - 100-pin LGA (7 mm × 7 mm, 0.65 mm pitch)
- Ta = -40°C to +105°C
  - 100-pin LQFP (14 mm × 14 mm, 0.5 mm pitch)
  - 64-pin LQFP (10 mm × 10 mm, 0.5 mm pitch)
  - 64-pin QFN (8 mm × 8 mm, 0.4 mm pitch)
  - 48-pin LQFP (7 mm × 7 mm, 0.5 mm pitch)
  - 48-pin QFN (7 mm × 7 mm, 0.5 mm pitch)
  - 40-pin QFN (6 mm × 6 mm, 0.5 mm pitch)

1. Overview

The MCU integrates multiple series of software- and pin-compatible Arm®-based 32-bit cores that share a common set of Renesas peripherals to facilitate design scalability and efficient platform-based product development.

The MCU provides an optimal combination of low-power, high-performance Arm Cortex®-M4 core running up to 48 MHz with the following features:

- 256-KB code flash memory
- 32-KB SRAM
- Segment LCD Controller (SLCDC)
- Capacitive Touch Sensing Unit (CTSU)
- USB 2.0 Full-Speed Module (USBFS)
- 14-bit A/D Converter (ADC14)
- 12-bit D/A Converter (DAC12)
- Security features.

1.1 Function Outline

Table 1.1 Arm core

Feature	Functional description
Arm Cortex-M4 core	• Maximum operating frequency: up to 48 MHz • Arm Cortex-M4 core - Revision: r0p1-01rel0 - Armv7E-M architecture profile - Single precision floating-point unit compliant with the ANSI/IEEE Std 754-2008. • Arm Memory Protection Unit (Arm MPU) - Armv7 Protected Memory System Architecture - 8 protected regions. • SysTick timer - Driven by SYSTICCLK (LOCO) or ICLK.

Table 1.2 Memory

Feature	Functional description
Code flash memory	Maximum 256-KB code flash memory. See section 44, Flash Memory in User's Manual.
Data flash memory	8-KB data flash memory. See section 44, Flash Memory in User's Manual.
Option-setting memory	The option-setting memory determines the state of the MCU after a reset. See section 6, Option-Setting Memory in User's Manual.
SRAM	On-chip high-speed SRAM with either parity bit or Error Correction Code (ECC). An area in SRAM0 provides error correction capability using ECC. See section 43, SRAM in User's Manual.

Table 1.3 System (1 of 2)

Feature	Functional description
Operating modes	Two operating modes: • Single-chip mode • SCI/USB boot mode. See section 3, Operating Modes in User's Manual.
Resets	14 resets: • RES pin reset • Power-on reset • VBATT-selected voltage power-on reset • Independent watchdog timer reset • Watchdog timer reset • Voltage monitor 0 reset • Voltage monitor 1 reset • Voltage monitor 2 reset • SRAM parity error reset • SRAM ECC error reset • Bus master MPU error reset • Bus slave MPU error reset • CPU stack pointer error reset • Software reset. See section 5, Resets in User's Manual.
Low Voltage Detection (LVD)	Low Voltage Detection (LVD) function monitors the voltage level input to the VCC pin, and the detection level can be selected using a software program. See section 7, Low Voltage Detection (LVD) in User's Manual.
Clocks	• Main clock oscillator (MOSC) • Sub-clock oscillator (SOSC) • High-speed on-chip oscillator (HOCO) • Middle-speed on-chip oscillator (MOCO) • Low-speed on-chip oscillator (LOCO) • PLL frequency synthesizer • IWDT-dedicated on-chip oscillator • Clock out support. See section 8, Clock Generation Circuit in User's Manual.
Clock Frequency Accuracy Measurement Circuit (CAC)	The Clock Frequency Accuracy Measurement Circuit (CAC) counts pulses of the clock to be measured (measurement target clock) within the time generated by the clock to be used as a measurement reference (measurement reference clock), and determines the accuracy depending on whether the number of pulses is within the allowable range. When measurement is complete or the number of pulses within the time generated by the measurement reference clock is not within the allowable range, an interrupt request is generated. See section 9, Clock Frequency Accuracy Measurement Circuit (CAC) in User's Manual.
Interrupt Controller Unit (ICU)	The Interrupt Controller Unit (ICU) controls which event signals are linked to the NVIC/DTC module and DMAC module. The ICU also controls NMI interrupts. See section 13, Interrupt Controller Unit (ICU) in User's Manual.
Key Interrupt Function (KINT)	A key interrupt can be generated by setting the Key Return Mode Register (KRM) and inputting a rising or falling edge to the key interrupt input pins. See section 20, Key Interrupt Function (KINT) in User's Manual.
Low power modes	Power consumption can be reduced in multiple ways, such as by setting clock dividers, stopping modules, selecting power control mode in normal operation, and transitioning to low power modes. See section 10, Low Power Modes in User's Manual.
Battery backup function	A battery backup function is provided for partial powering by a battery. The battery powered area includes RTC, SOSC, LOCO, wakeup control, backup memory, VBATT_R low voltage detection, and switches between VCC and VBATT. During normal operation, the battery powered area is powered by the main power supply, which is the VCC pin. When a VCC voltage drop is detected, the power source is switched to the dedicated battery backup power pin, the VBATT pin. When the voltage rises again, the power source is switched from the VBATT pin to the VCC pin. See section 11, Battery Backup Function in User's Manual.
Register write protection	The register write protection function protects important registers from being overwritten because of software errors. See section 12, Register Write Protection in User's Manual.

Table 1.3 System (2 of 2)

Feature	Functional description
Memory Protection Unit (MPU)	Four Memory Protection Units (MPUs) and a CPU stack pointer monitor function are provided for memory protection. See section 15, Memory Protection Unit (MPU) in User's Manual.
Watchdog Timer (WDT)	The Watchdog Timer (WDT) is a 14-bit down-counter. It can be used to reset the MCU when the counter underflows because the system has run out of control and is unable to refresh the WDT. In addition, a non-maskable interrupt or interrupt can be generated by an underflow. A refresh-permitted period can be set to refresh the counter and used as the condition to detect when the system runs out of control. See section 25, Watchdog Timer (WDT) in User's Manual.
Independent Watchdog Timer (IWDT)	The Independent Watchdog Timer (IWDT) consists of a 14-bit down-counter that must be serviced periodically to prevent counter underflow. It can be used to reset the MCU or to generate a non-maskable interrupt/interrupt for a timer underflow. Because the timer operates with an independent, dedicated clock source, it is particularly useful in returning the MCU to a known state as a fail-safe mechanism when the system runs out of control. The IWDT can be triggered automatically on a reset, underflow, refresh error, or by a refresh of the count value in the registers. See section 26, Independent Watchdog Timer (IWDT) in User's Manual.

Table 1.4 Event link

Feature	Functional description
Event Link Controller (ELC)	The Event Link Controller (ELC) uses the interrupt requests generated by various peripheral modules as event signals to connect them to different modules, enabling direct interaction between the modules without CPU intervention. See section 18, Event Link Controller (ELC) in User's Manual.

Table 1.5 Direct memory access

Feature	Functional description
Data Transfer Controller (DTC)	A Data Transfer Controller (DTC) module is provided for transferring data when activated by an interrupt request. See section 17, Data Transfer Controller (DTC) in User's Manual.
DMA Controller (DMAC)	A 4-channel DMA Controller (DMAC) module is provided for transferring data without the CPU. When a DMA transfer request is generated, the DMAC transfers data stored at the transfer source address to the transfer destination address. See section 16, DMA Controller (DMAC) in User's Manual.

Table 1.6 Timers

Feature	Functional description
General PWM Timer (GPT)	The General PWM Timer (GPT) is a 32-bit timer with 2 channels and a 16-bit timer with 6 channels. PWM waveforms can be generated by controlling the up-counter, down-counter, or the up- and down-counter. In addition, PWM waveforms can be generated for controlling brushless DC motors. The GPT can also be used as a general-purpose timer. See section 22, General PWM Timer (GPT) in User's Manual.
Port Output Enable for GPT (POEG)	Use the Port Output Enable for GPT (POEG) function to place the General PWM Timer (GPT) output pins in the output disable state. See section 21, Port Output Enable for GPT (POEG) in User's Manual.
Asynchronous General Purpose Timer (AGT)	The Asynchronous General Purpose Timer (AGT) is a 16-bit timer that can be used for pulse output, external pulse width or period measurement, and counting of external events. This 16-bit timer consists of a reload register and a down-counter. The reload register and the down-counter are allocated to the same address, and they can be accessed with the AGT register. See section 23, Asynchronous General Purpose Timer (AGT) in User's Manual.
Realtime Clock (RTC)	The Realtime Clock (RTC) has two counting modes, calendar count mode and binary count mode, that are controlled by the register settings. For calendar count mode, the RTC has a 100-year calendar from 2000 to 2099 and automatically adjusts dates for leap years. For binary count mode, the RTC counts seconds and retains the information as a serial value. Binary count mode can be used for calendars other than the Gregorian (Western) calendar. See section 24, Realtime Clock (RTC) in User's Manual.

Table 1.7 Communication interfaces (1 of 2)

Feature	Functional description
Serial Communications Interface (SCI)	The Serial Communications Interface (SCI) is configurable to five asynchronous and synchronous serial interfaces: • Asynchronous interfaces (UART and asynchronous communications interface adapter (ACIA)) • 8-bit clock synchronous interface • Simple IIC (master-only) • Simple SPI • Smart card interface. The smart card interface complies with the ISO/IEC 7816-3 standard for electronic signals and transmission protocol. SCI0 and SCI1 have FIFO buffers to enable continuous and full-duplex communication, and the data transfer speed can be configured independently using an on-chip baud rate generator. See section 28, Serial Communications Interface (SCI) in User's Manual.
I^2C Bus Interface (IIC)	The 3-channel I^2C Bus Interface (IIC) module conforms with and provides a subset of the NXP I^2C bus (Inter-Integrated Circuit bus) interface functions. See section 29, I2C Bus Interface (IIC) in User's Manual.
Serial Peripheral Interface (SPI)	Two independent Serial Peripheral Interface (SPI) channels are capable of high-speed, full-duplex synchronous serial communications with multiple processors and peripheral devices. See section 31, Serial Peripheral Interface (SPI) in User's Manual.
Serial Sound Interface Enhanced (SSIE)	The Serial Sound Interface Enhanced (SSIE) peripheral provides functionality to interface with digital audio devices for transmitting PCM audio data over a serial bus with the MCU. The SSIE supports an audio clock frequency of up to 50 MHz, and can be operated as a slave or master receiver, transmitter, or transceiver to suit various applications. The SSIE includes 8-stage FIFO buffers in the receiver and transmitter, and supports interrupts and DMA-driven data reception and transmission. See section 33, Serial Sound Interface Enhanced (SSIE) in User's Manual.
Controller Area Network (CAN) module	The Controller Area Network (CAN) module provides functionality to receive and transmit data using a message-based protocol between multiple slaves and masters in electromagnetically noisy applications. The CAN module complies with the ISO 11898-1 (CAN 2.0A/CAN 2.0B) standard and supports up to 32 mailboxes, which can be configured for transmission or reception in normal mailbox and FIFO modes. Both standard (11-bit) and extended (29-bit) messaging formats are supported. See section 30, Controller Area Network (CAN) Module in User's Manual.

Table 1.7 Communication interfaces (2 of 2)

Feature	Functional description
USB 2.0 Full-Speed Module (USBFS)	The USB 2.0 Full-Speed Module (USBFS) can operate as a host controller or device controller. The module supports full-speed and low-speed (only for the host controller) transfer as defined in the Universal Serial Bus Specification 2.0. The module has an internal USB transceiver and supports all of the transfer types defined in the Universal Serial Bus Specification 2.0. The USB has buffer memory for data transfer, providing a maximum of 10 pipes. Pipes 1 to 9 can be assigned any endpoint number based on the peripheral devices used for communication or based on the user system. The MCU supports revision 1.2 of the Battery Charging specification. Because the MCU can be powered at 5 V, the USB LDO regulator provides the internal USB transceiver power supply at 3.3 V. See section 27, USB 2.0 Full-Speed Module (USBFS) in User's Manual.

Table 1.8 Analog

Feature	Functional description
14-bit A/D Converter (ADC14)	A 14-bit successive approximation A/D converter is provided. Up to 25 analog input channels are selectable. Temperature sensor output and internal reference voltage are selectable for conversion. The A/D conversion accuracy is selectable from 12-bit and 14-bit conversion making it possible to optimize the tradeoff between speed and resolution in generating a digital value. See section 35, 14-Bit A/D Converter (ADC14) in User's Manual.
12-Bit D/A Converter (DAC12)	The 12-Bit D/A Converter (DAC12) converts data and includes an output amplifier. See section 36, 12-Bit D/A Converter (DAC12) in User's Manual.
8-Bit D/A Converter (DAC8) for ACMPLP	The 8-Bit D/A Converter (DAC8) converts data and does not include an output amplifier (DAC8). The DAC8 is used only as the reference voltage for ACMPLP. See section 40, 8-Bit D/A Converter (DAC8) in User's Manual.
Temperature Sensor (TSN)	The on-chip Temperature Sensor (TSN) determines and monitors the die temperature for reliable operation of the device. The sensor outputs a voltage directly proportional to the die temperature, and the relationship between the die temperature and the output voltage is linear. The output voltage is provided to the ADC14 for conversion and can be further used by the end application. See section 37, Temperature Sensor (TSN) in User's Manual.
Low-Power Analog Comparator (ACMPLP)	The Low-Power Analog Comparator (ACMPLP) compares the reference input voltage and analog input voltage. The comparison result can be read through software and also be output externally. The reference voltage can be selected from an input to the CMPREFi(i = 0,1) pin, an internal 8-bit D/A converter output, or the internal reference voltage (Vref) generated internally in the MCU. The ACMPLP response speed can be set before starting an operation. Setting the high-speed mode decreases the response delay time, but increases current consumption. Setting the low-speed mode increases the response delay time, but decreases current consumption. See section 39, Low-Power Analog Comparator (ACMPLP) in User's Manual.
Operational Amplifier (OPAMP)	The Operational Amplifier (OPAMP) amplifies small analog input voltages and outputs the amplified voltages. A total of four differential operational amplifier units with two input pins and one output pin are provided. See section 38, Operational Amplifier (OPAMP) in User's Manual.

Table 1.9 Human machine interfaces

Feature	Functional description
Segment LCD Controller (SLCDC)	The Segment LCD Controller (SLCDC) provides the following functions: • Waveform A or B selectable • The LCD driver voltage generator can switch between an internal voltage boosting method, a capacitor split method, and an external resistance division method • Automatic output of segment and common signals based on automatic display data register read • The reference voltage generated when operating the voltage boost circuit can be selected in 16 steps (contrast adjustment) • The LCD can be made to blink. See section 45, Segment LCD Controller (SLCDC) in User's Manual.
Capacitive Touch Sensing Unit (CTSU)	The Capacitive Touch Sensing Unit (CTSU) measures the electrostatic capacitance of the touch sensor. Changes in the electrostatic capacitance are determined by software, which enables the CTSU to detect whether a finger is in contact with the touch sensor. The electrode surface of the touch sensor is usually enclosed within an electrical insulator so that fingers do not come into direct contact with the electrode. See section 41, Capacitive Touch Sensing Unit (CTSU) in User's Manual.

Table 1.10 Data processing

Feature	Functional description
Cyclic Redundancy Check (CRC) calculator	The Cyclic Redundancy Check (CRC) calculator generates CRC codes to detect errors in the data. The bit order of CRC calculation results can be switched for LSB-first or MSB-first communication. Additionally, various CRC generation polynomials are available. The snoop function allows monitoring reads from and writes to specific addresses. This function is useful in applications that require CRC code to be generated automatically in certain events, such as monitoring writes to the serial transmit buffer and reads from the serial receive buffer. See section 32, Cyclic Redundancy Check (CRC) Calculator in User's Manual.
Data Operation Circuit (DOC)	The Data Operation Circuit (DOC) compares, adds, and subtracts 16-bit data. See section 42, Data Operation Circuit (DOC) in User's Manual.

Table 1.11 Security

Feature	Functional description
Secure Crypto Engine 5 (SCE5)	• Security algorithm - Symmetric algorithm: AES. • Other support features - TRNG (True Random Number Generator) - Hash-value generation: GHASH.

1.2 Block Diagram

Figure 1.1 shows a block diagram of the MCU superset. Some individual devices within the group have a subset of the features.

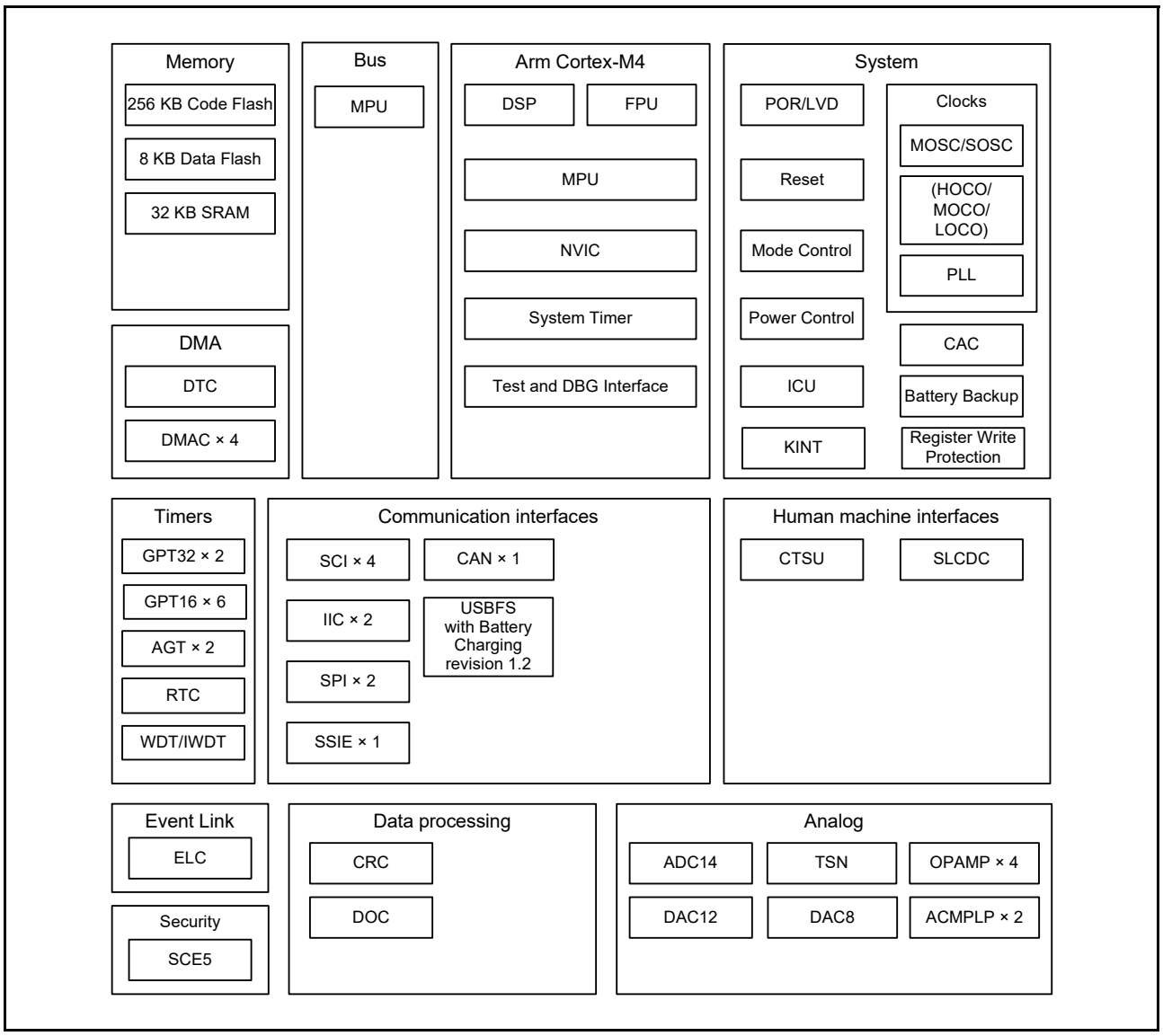

Figure 1.1 Block diagram

1.3 Part Numbering

Figure 1.2 shows the product part number information, including memory capacity, and package type. Table 1.12 shows a product list.

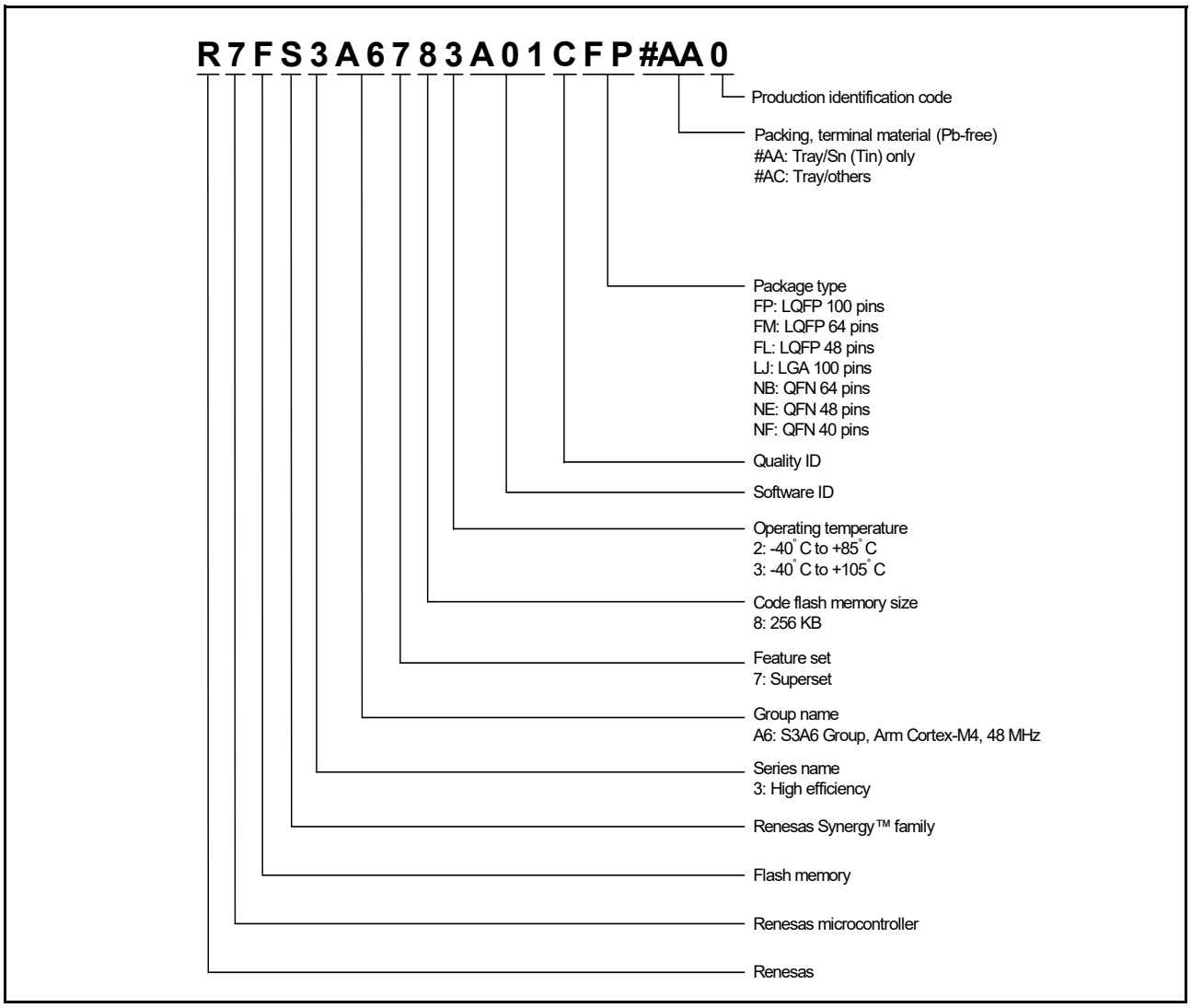

Figure 1.2 Part numbering scheme

Table 1.12 Product list

Product part number	Orderable part number	Package code	Code flash	Data flash	SRAM	Operating temperature
R7FS3A6783A01CFP	R7FS3A6783A01CFP#AA0	PLQP0100KB-B	256 KB	8 KB	32 KB	-40 to +105°C
R7FS3A6782A01CLJ	R7FS3A6782A01CLJ#AC0	PTLG0100JA-A				-40 to +85°C
R7FS3A6783A01CFM	R7FS3A6783A01CFM#AA0	PLQP0064KB-C				-40 to +105°C
R7FS3A6783A01CNB	R7FS3A6783A01CNB#AC0	PWQN0064LA-A				-40 to +105°C
R7FS3A6783A01CFL	R7FS3A6783A01CFL#AA0	PLQP0048KB-B				-40 to +105°C
R7FS3A6783A01CNE	R7FS3A6783A01CNE#AC0	PWQN0048KB-A				-40 to +105°C
R7FS3A6783A01CNF	R7FS3A6783A01CNF#AC0	PWQN0040KC-A				-40 to +105°C

1.4 Function Comparison

Table 1.13 Function comparison

Part numbers		R7FS3A6783A01CFP	R7FS3A6782A01CLJ	R7FS3A6783A01CFM/ R7FS3A6783A01CNB	R7FS3A6783A01CFL/ R7FS3A6783A01CNE	R7FS3A6783A01CNF
Pin count		100	100	64	48	40
Package		LQFP	LGA	LQFP/QFN	LQFP/QFN	QFN
Code flash memory		256 KB				
Data flash memory		8 KB				
SRAM		32 KB				
	Parity	16 KB				
	ECC	16 KB				
System	CPU clock	48 MHz				
	Backup registers	512 bytes				
	ICU	Yes				
	KINT	8			5	3
Event control	ELC	Yes				
DMA	DTC	Yes				
	DMAC	4				
Bus	External bus	No				
Timers	GPT32	2				
	GPT16	6			4	2
	AGT	2			No	
	RTC	Yes				
	WDT/IWDT	Yes				
Communication	SCI	4				
	IIC	2				
	SPI	2				1
	SSIE	1		No		
	QSPI	No				
	SDHI	No				
	CAN	1				
	USBFS	Yes				
Analog	ADC14	25		18	14	11
	DAC12	1				
	DAC8	2				
	ACMPLP	2				1
	OPAMP	4	4	3	1	No
	TSN	Yes				
HMI	SLCDC	4 com × 38 seg or 8 com × 34 seg		4 com × 21 seg or 8 com × 17 seg	No	
	CTSU	27		24	15	10
Data processing	CRC	Yes				
	DOC	Yes				
Security		SCE5				

1.5 Pin Functions

Table 1.14 Pin functions (1 of 4)

Function	Signal	I/O	Description
Power supply	VCC	Input	Power supply pin. Connect this pin to the system power supply. Connect it to VSS through a 0.1-μF capacitor. The capacitor should be placed close to the pin.
	VCL	I/O	Connect this pin to the VSS pin through the smoothing capacitor used to stabilize the internal power supply. Place the capacitor close to the pin.
	VSS	Input	Ground pin. Connect to the system power supply (0 V).
	VBATT	Input	Backup power supply pin
Clock	XTAL	Output	Pins for a crystal resonator. An external clock signal can be input through the EXTAL pin.
	EXTAL	Input	
	XCIN	Input	Input/output pins for the sub-clock oscillator. Connect a crystal resonator between XCOUT and XCIN.
	XCOUT	Output	
	CLKOUT	Output	Clock output pin
Operating mode control	MD	Input	Pins for setting the operating mode. The signal levels on these pins must not be changed during operation mode transition on release from the reset state.
System control	RES	Input	Reset signal input pin. The MCU enters the reset state when this signal goes low.
CAC	CACREF	Input	Measurement reference clock input pin
Interrupt	NMI	Input	Non-maskable interrupt request pin
	IRQ0 to IRQ12, IRQ14, IRQ15	Input	Maskable interrupt request pins
KINT	KR00 to KR07	Input	Key interrupt input pins. A key interrupt (KINT) can be generated by inputting a falling edge to the key interrupt input pins.
On-chip debug	TMS	I/O	On-chip emulator or boundary scan pins
	TDI	Input	
	TCK	Input	
	TDO	Output	
	SWDIO	I/O	Serial wire debug data input/output pin
	SWCLK	Input	Serial wire clock pin
	SWO	Output	Serial wire trace output pin
Battery Backup	VBATWIO0 to VBATWIO2	I/O	Output wakeup signal for the VBATT wakeup control function. External event input for the VBATT wakeup control function.
GPT	GTETRGA, GTETRGB	Input	External trigger input pin
	GTIOC0A to GTIOC7A, GTIOC0B to GTIOC7B	I/O	Input capture, output capture, or PWM output pin
	GTIU	Input	Hall sensor input pin U
	GTIV	Input	Hall sensor input pin V
	GTIW	Input	Hall sensor input pin W
	GTOUUP	Output	3-phase PWM output for BLDC motor control (positive U phase)
	GTOULO	Output	3-phase PWM output for BLDC motor control (negative U phase)
	GTOVUP	Output	3-phase PWM output for BLDC motor control (positive V phase)
	GTOVLO	Output	3-phase PWM output for BLDC motor control (negative V phase)
	GTOWUP	Output	3-phase PWM output for BLDC motor control (positive W phase)
	GTOWLO	Output	3-phase PWM output for BLDC motor control (negative W phase)

Table 1.14 Pin functions (2 of 4)

Function	Signal	I/O	Description
AGT	AGTEE0, AGTEE1	Input	External event input enable signals
	AGTIO0, AGTIO1	I/O	External event input and pulse output pins
	AGTO0, AGTO1	Output	Pulse output pins
	AGTOA0, AGTOA1	Output	Output compare match A output pins
	AGTOB0, AGTOB1	Output	Output compare match B output pins
RTC	RTCOUT	Output	Output pin for 1-Hz/64-Hz clock
	RTCIC0 to RTCIC2	Input	Time capture event input pins
SCI	SCK0 to SCK2, SCK9	I/O	Clock (clock synchronous mode) input/output pins
	RXD0 to RXD2, RXD9	Input	Received data (asynchronous mode/clock synchronous mode) input pins
	TXD0 to TXD2, TXD9	Output	Transmitted data (asynchronous mode/clock synchronous mode) output pins
	CTS0_RTS0 to CTS2_RTS2, CTS9_RTS9	I/O	Input/output pins for controlling the start of transmission and reception (asynchronous mode/clock synchronous mode), active-low
	SCL0 to SCL2, SCL9	I/O	I^2C clock (simple IIC) input/output pins
	SDA0 to SDA2, SDA9	I/O	I^2C data (simple IIC) input/output pins
	SCK0 to SCK2, SCK9	I/O	Clock (simple SPI) input/output pins
	MISO0 to MISO2, MISO9	I/O	Slave transmission of data (simple SPI) input/output pins
	MOSI0 to MOSI2, MOSI9	I/O	Master transmission of data (simple SPI) input/output pins
	SS0 to SS2, SS9	Input	Slave-select input pins (simple SPI), active-low
IIC	SCL0, SCL1	I/O	Clock input/output pins
	SDA0, SDA1	I/O	Data input/output pins
SSIE	SSIBCK0	I/O	SSIE serial bit clock pin
	SSILRCK0/SSIFS0	I/O	Word select pins
	SSITXD0	Output	Serial data output pin
	SSIRXD0	Input	Serial data input pin
	AUDIO_CLK	Input	External clock pin for audio (input oversampling clock)
SPI	RSPCKA, RSPCKB	I/O	Clock input/output pin
	MOSIA, MOSIB	I/O	Input/output pins for data output from the master
	MISOA, MISOB	I/O	Input/output pins for data output from the slave
	SSLA0, SSLB0	I/O	Input/output pins for slave selection
	SSLA1, SSLA2, SSLA3, SSLB1, SSLB2, SSLB3	Output	Output pins for slave selection
CAN	CRX0	Input	Receive data
	CTX0	Output	Transmit data

Table 1.14 Pin functions (3 of 4)

Function	Signal	I/O	Description
USBFS	VSS_USB	Input	Ground pin
	VCC_USB_LDO	Input	Power supply pin for USB LDO regulator
	VCC_USB	I/O	Input: USB transceiver power supply pin. Output: USB LDO regulator output pin. This pin should be connected to an external capacitor.
	USB_DP	I/O	D+ I/O pin of the USB on-chip transceiver. This pin should be connected to the D+ pin of the USB bus.
	USB_DM	I/O	D- I/O pin of the USB on-chip transceiver. This pin should be connected to the D- pin of the USB bus.
	USB_VBUS	Input	USB cable connection monitor pin. This pin should be connected to VBUS of the USB bus. The VBUS pin status (connected or disconnected) can be detected when the USB module is operating as a device controller.
	USB_EXICEN	Output	Low power control signal for external power supply (OTG) chip
	USB_VBUSEN	Output	VBUS (5 V) supply enable signal for external power supply chip
	USB_OVRCURA, USB_OVRCURB	Input	Connect the external overcurrent detection signals to these pins. Connect the VBUS comparator signals to these pins when the OTG power supply chip is connected.
	USB_ID	Input	Connect the MicroAB connector ID input signal to this pin during operation in OTG mode
Analog power supply	AVCC0	Input	Analog voltage supply pin
	AVSS0	Input	Analog voltage supply ground pin
	VREFH0	Input	Analog reference voltage supply pin
	VREFL0	Input	Reference power supply ground pin
	VREFH	Input	Analog reference voltage supply pin for D/A converter
	VREFL	Input	Analog reference ground pin for D/A converter
ADC14	AN000 to AN014, AN016 to AN025	Input	Input pins for the analog signals to be processed by the A/D converter
	ADTRG0	Input	Input pins for the external trigger signals that start the A/D conversion, active-low
DAC12	DA0	Output	Output pins for the analog signals to be processed by the D/A converter
Comparator output	VCOUT	Output	Comparator output pin
ACMPLP	CMPREF0, CMPREF1	Input	Reference voltage input pin
	CMPIN0, CMPIN1	Input	Analog voltage input pins
OPAMP	AMP0+ to AMP3+	Input	Analog voltage input pins
	AMP0- to AMP3-	Input	Analog voltage input pins
	AMP0O to AMP3O	Output	Analog voltage output pins
CTSU	TS00 to TS13, TS17 to TS22, TS27 to TS31, TS34, TS35	Input	Capacitive touch detection pins (touch pins)
	TSCAP	-	Secondary power supply pin for the touch driver

Table 1.14 Pin functions (4 of 4)

Function	Signal	I/O	Description
I/O ports	P000 to P008, P010 to P015	I/O	General-purpose input/output pins
	P100 to P115	I/O	General-purpose input/output pins
	P200	Input	General-purpose input pin
	P201 to P206, P212, P213	I/O	General-purpose input/output pins
	P214, P215	Input	General-purpose input pins
	P300 to P307	I/O	General-purpose input/output pins
	P400 to P415	I/O	General-purpose input/output pins
	P500 to P505	I/O	General-purpose input/output pins
	P600 to P603, P608 to P610	I/O	General-purpose input/output pins
	P708	I/O	General-purpose input/output pins
	P808, P809	I/O	General-purpose input/output pins
	P914, P915	I/O	General-purpose input/output pins
SLCDC	VL1, VL2, VL3, VL4	I/O	Voltage pin for driving the LCD
	CAPH, CAPL	I/O	Capacitor connection pin for the LCD controller/driver
	COM0 to COM7	Output	Common signal output pins for the LCD controller/driver
	SEG00 to SEG37	Output	Segment signal output pins for the LCD controller/driver

1.6 Pin Assignments

Figure 1.3 to Figure 1.6 show the pin assignments.

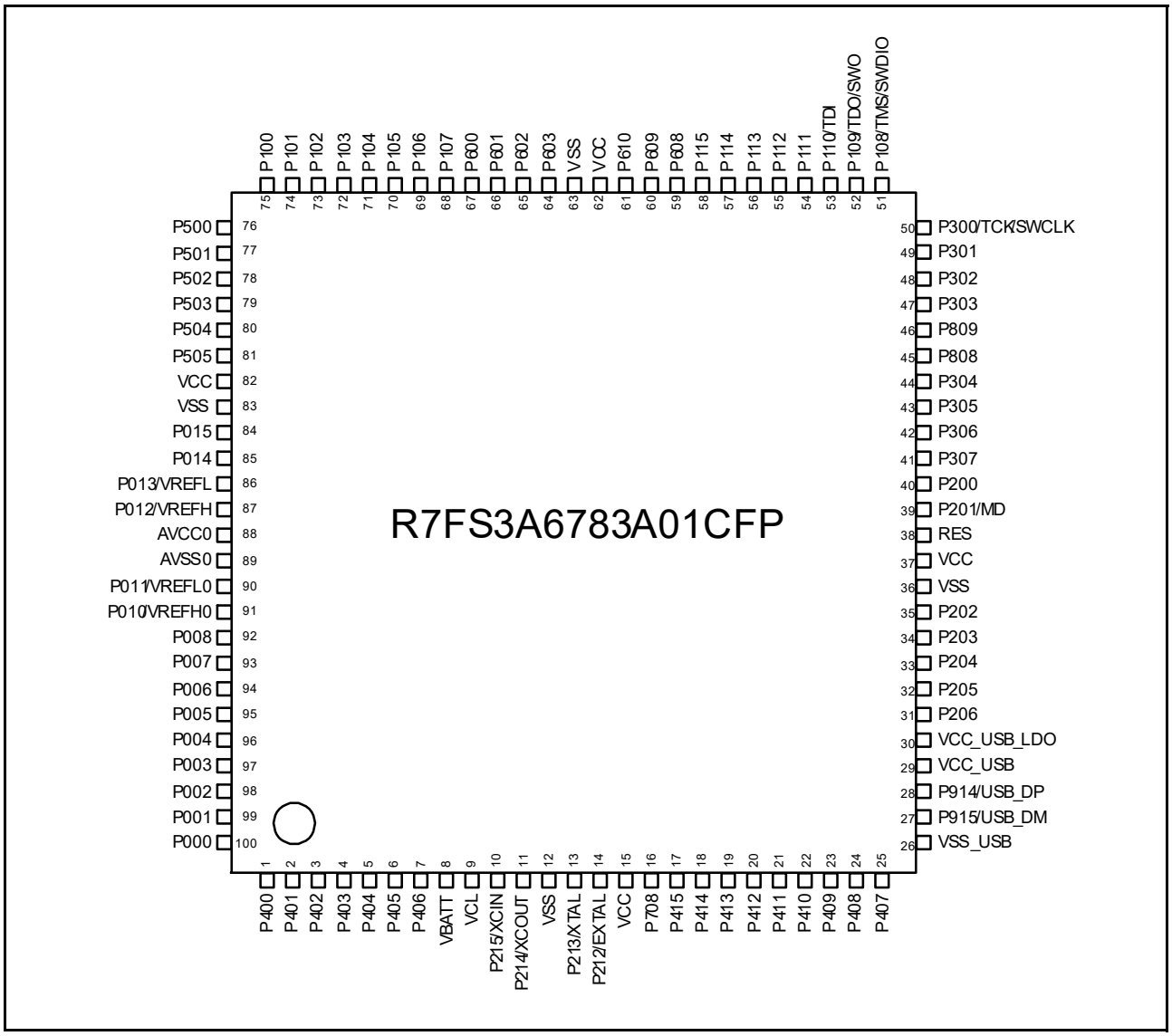

Figure 1.3 Pin assignment for 100-pin LQFP (top view)

R7FS3A6782A01CLJ

	A	B	C	D	E	F	G	H	J	K	
10	P407	P409	P412	VCC	P212/ EXTAL	P215/ XCIN	VCL	P403	P400	P000	10
9	P915/ USB_DM	P914/ USB_DP	P413	VSS	P213/ XTAL	P214/ XCOUT	VBATT	P405	P401	P001	9
8	VCC_ USB	VSS_ USB	VCC_US B_LDO	P411	P415	P708	P404	P003	P004	P002	8
7	P205	P204	P206	P408	P414	P406	P006	P007	P008	P005	7
6	VSS	VCC	P202	P203	P410	P402	P505	AVSS 0	P011/ VREFL0	P010/ VREFH0	6
5	P200	P201/MD	P307	RES	P113	P600	P504	AVCC0	P013/ VREFL	P012/ VREFH	5
4	P305	P304	P808	P306	P115	P601	P503	P100	P015	P014	4
3	P809	P303	P110/TDI	P111	P609	P602	P107	P103	VSS	VCC	3
2	P300/ TCK/ SWCLK	P302	P301	P114	P610	P603	P106	P101	P501	P502	2
1	P108/ TMS/ SWDIO	P109/ TDO/ SWO	P112	P608	VCC	VSS	P105	P104	P102	P500	1
	A	B	C	D	E	F	G	H	J	K	

Figure 1.4 Pin assignment for 100-pin LGA (upper perspective view)

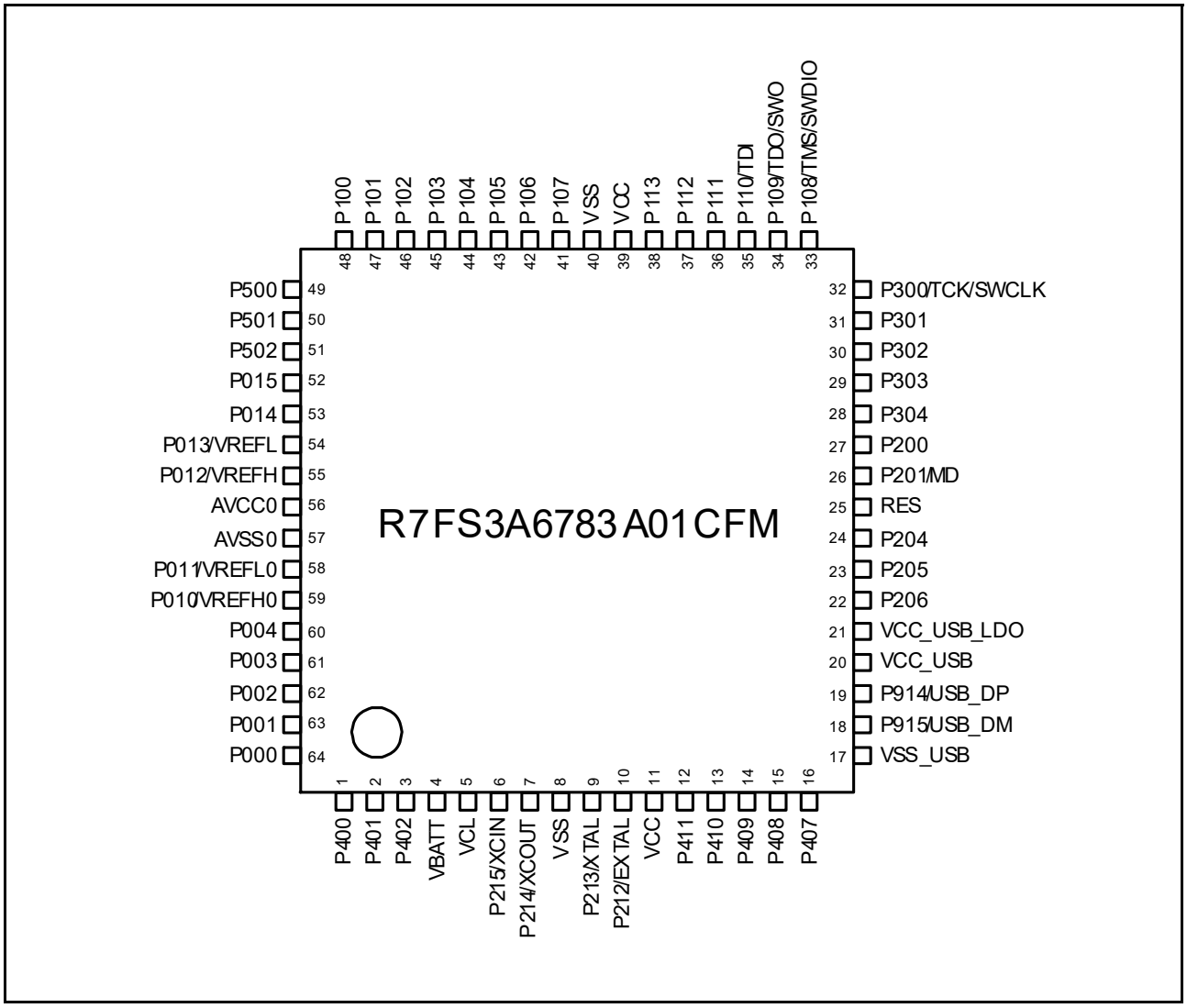

Figure 1.5 Pin assignment for 64-pin LQFP (top view)

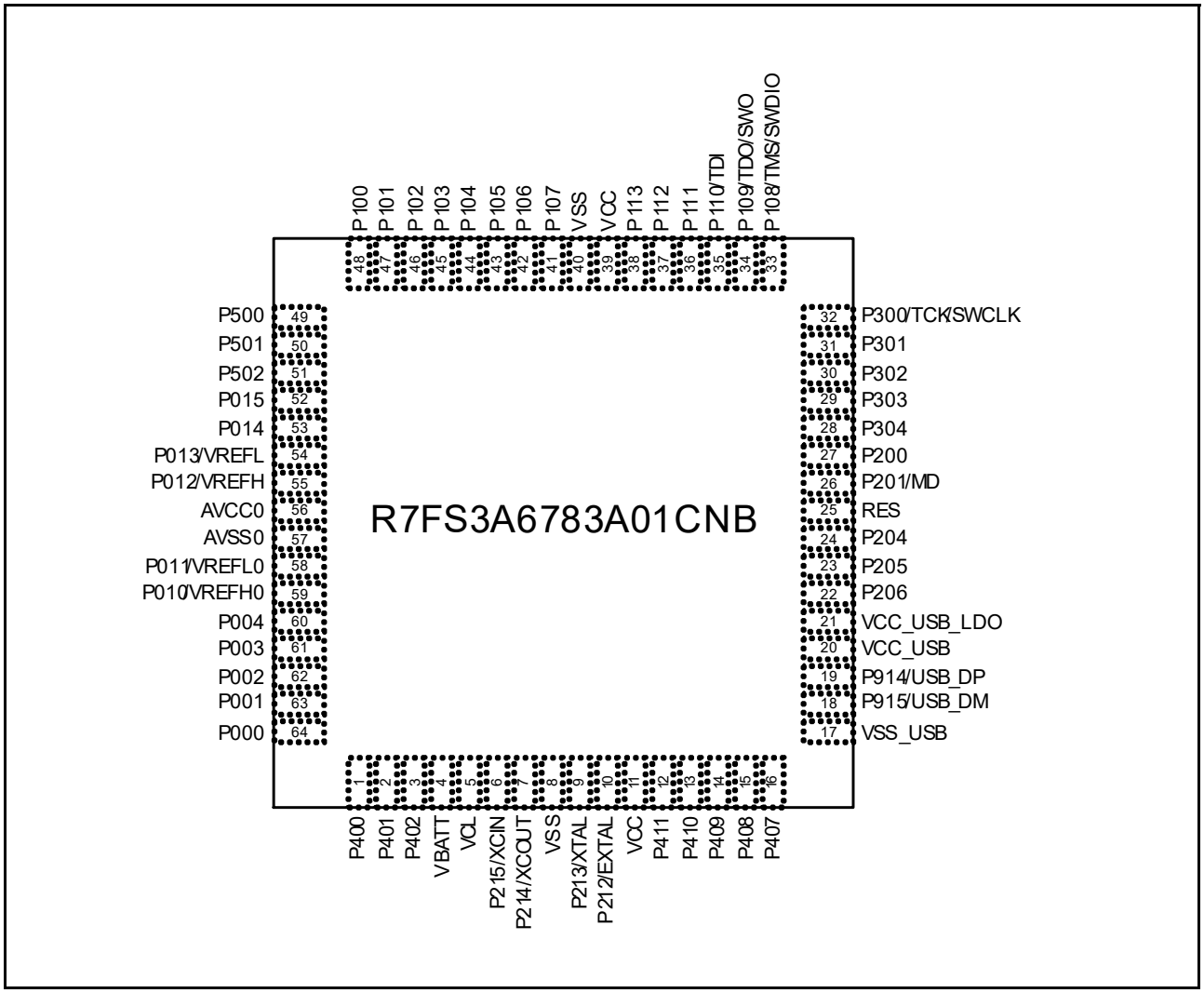

Figure 1.6 Pin assignment for 64-pin QFN (upper perspective view)

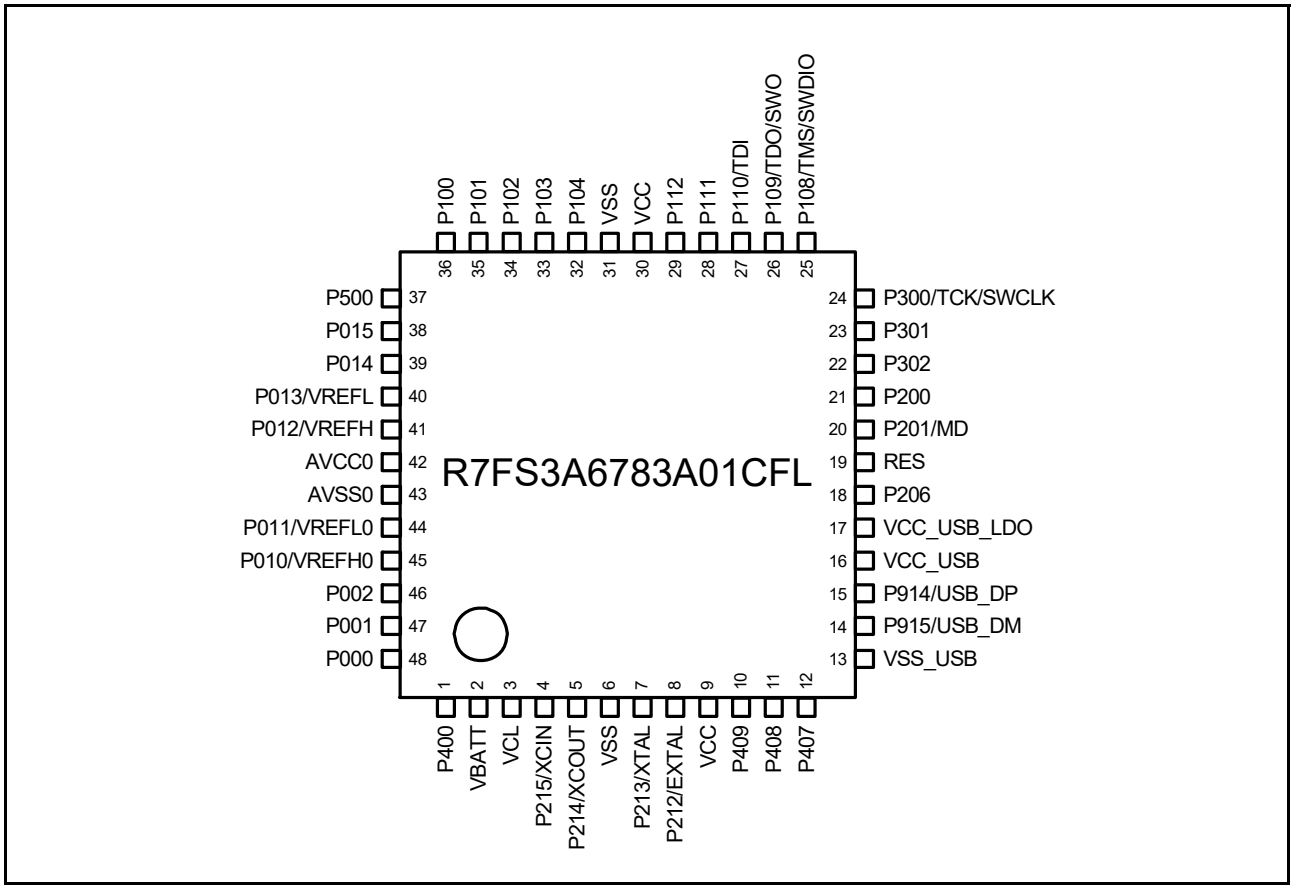

Figure 1.7 Pin assignment for 48-pin LQFP (top view)

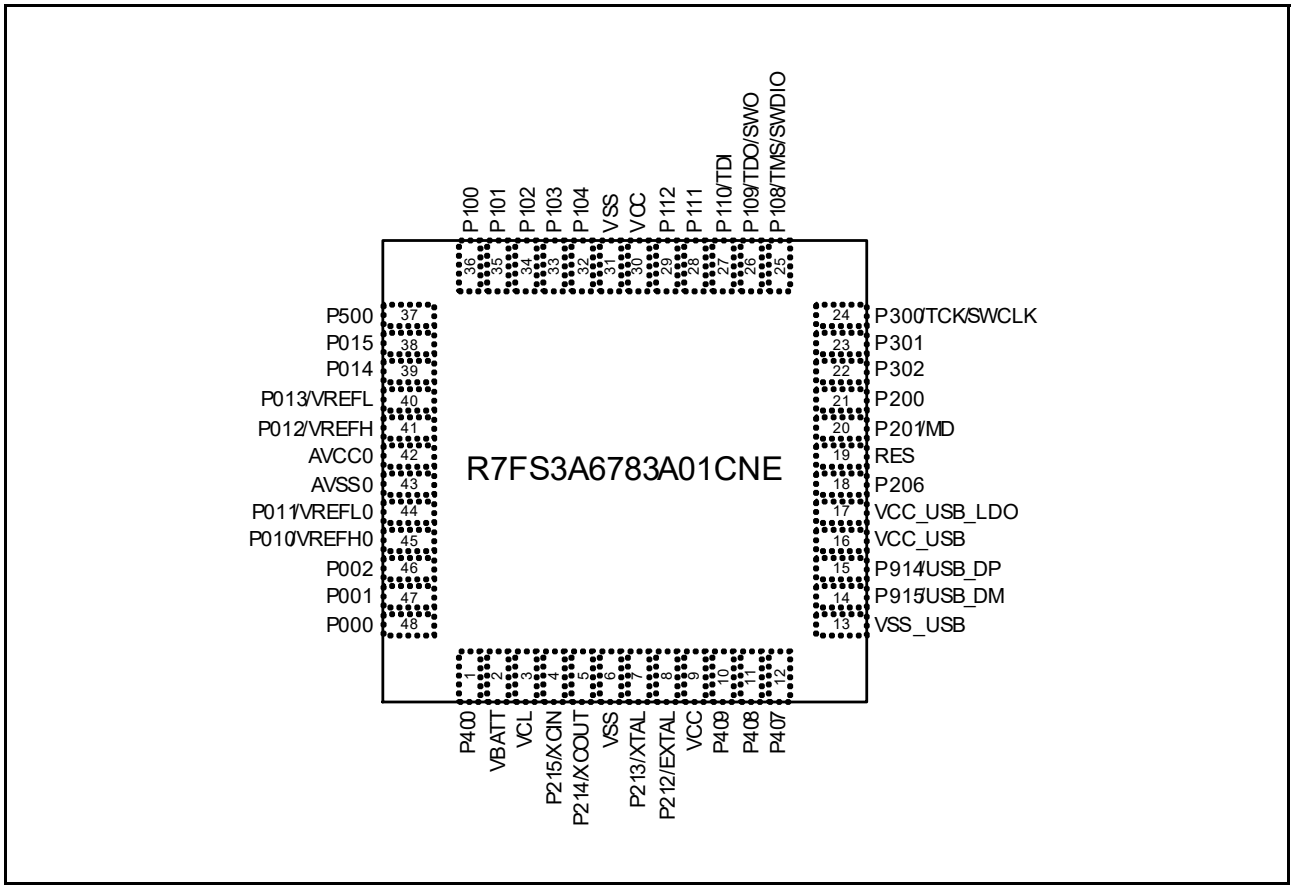

Figure 1.8 Pin assignment for 48-pin QFN (top view)

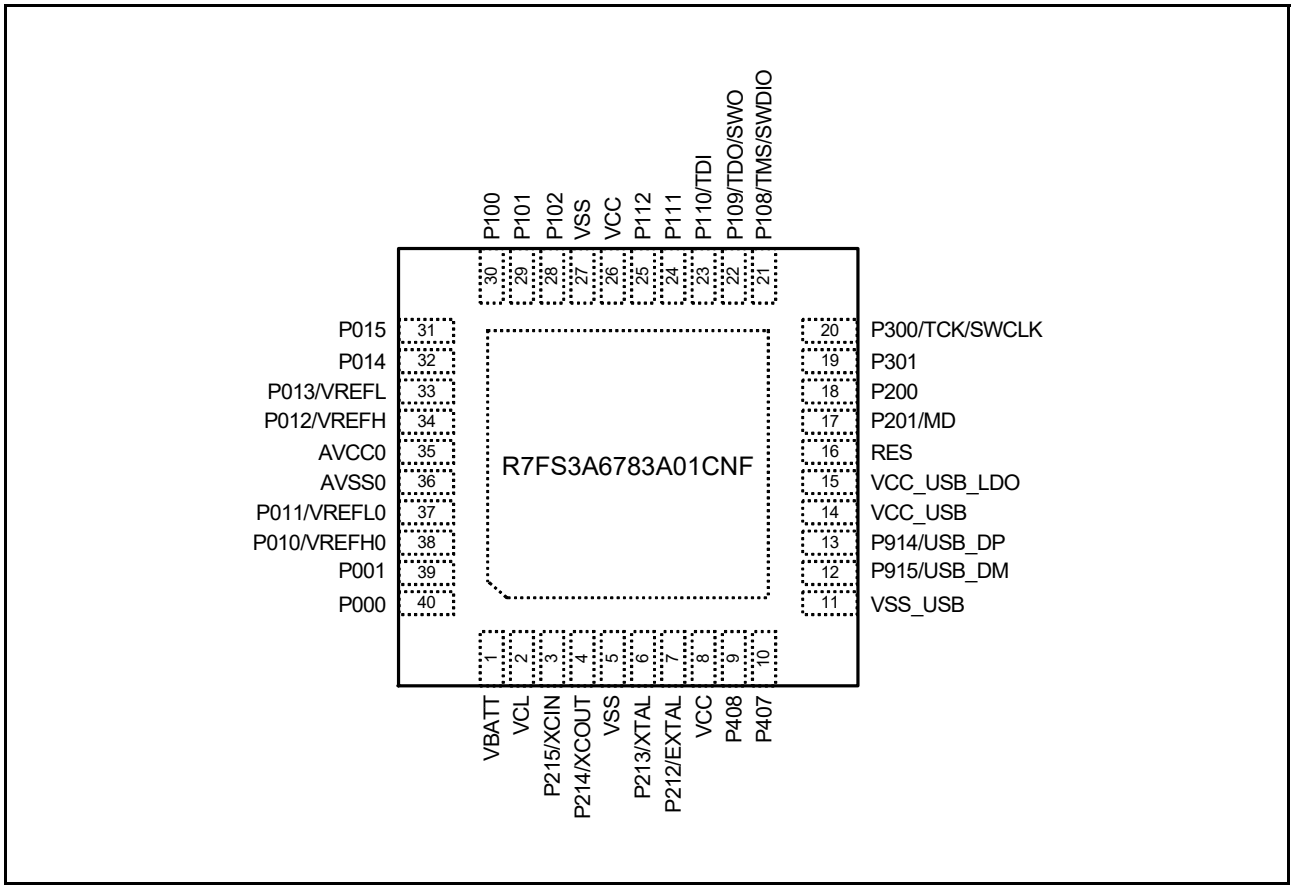

Figure 1.9 Pin assignment for 40-pin QFN (top view)

1.7 Pin Lists

Pin number										Timers				Communication interfaces					Analogs			HMI	
LQFP100	LGA100	LQFP64	QFN64	LQFP48	QFN48	QFN40	Power, System, Clock, Debug, CAC, VBATT	Interrupt	I/O ports	AGT	GPT_OPS, POEG	GPT	RTC	USBFS,CAN	SCI	IIC	SPI	SSIE	ADC14	DAC12, OPAMP	ACMPLP	SLCDC	CTSU
1	J10	1	1	1	1		CACREF	IRQ0	P400	AGTIO1		GTIOC6A			SCK0 SCK1	SCL0		AUDIO_CLK				SEG04	TS20
2	J9	2	2					IRQ5	P401		GTETRGA	GTIOC6B		CTX0	CTS0_ RTS0/ SS0 TXD1/ MOSI1/ SDA1	SDA0						SEG05	TS19
3	F6	3	3				VBATWIO0	IRQ4	P402	AGTIO0/ AGTIO1			RTCIC0	CRX0	RXD1/ MISO1/ SCL1							SEG06	TS18
4	H10						VBATWIO1		P403	AGTIO0/ AGTIO1		GTIOC3A	RTCIC1		CTS1_ RTS1/ SS1			SSIBCK0					TS17
5	G8						VBATWIO2		P404			GTIOC3B	RTCIC2					SSILRCK0/ SSIFS0					
6	H9								P405			GTIOC1A						SSITXD0					
7	F7								P406			GTIOC1B						SSIRXD0					
8	G9	4	4	2	2	1	VBATT																
9	G10	5	5	3	3	2	VCL																
10	F10	6	6	4	4	3	XCIN		P215														
11	F9	7	7	5	5	4	XCOUT		P214														
12	D9	8	8	6	6	5	VSS																
13	E9	9	9	7	7	6	XTAL	IRQ2	P213		GTETRGA	GTIOC0A			TXD1/ MOSI1/ SDA1								
14	E10	10	10	8	8	7	EXTAL	IRQ3	P212	AGTEE1	GTETRGB	GTIOC0B			RXD1/ MISO1/ SCL1								
15	D10	11	11	9	9	8	VCC																
16	F8								P708						RXD1/ MISO1/ SCL1		SSLA3						
17	E8							IRQ8	P415			GTIOC0A					SSLA2						
18	E7							IRQ9	P414			GTIOC0B					SSLA1						
19	C9								P413						CTS0_ RTS0/ SS0		SSLA0						
20	C10								P412						SCK0		RSPCKA						
21	D8	12	12					IRQ4	P411	AGTOA1	GTOVUP	GTIOC6A			TXD0/ MOSI0/ SDA0		MOSIA					SEG07	TS07
22	E6	13	13					IRQ5	P410	AGTOB1	GTOVLO	GTIOC6B			RXD0/ MISO0/ SCL0		MISOA					SEG08	TS06
23	B10	14	14	10	10			IRQ6	P409		GTOWUP	GTIOC5A		USB_EXICEN	TXD9/ MOSI9/ SDA9							SEG09	TS05
24	D7	15	15	11	11	9		IRQ7	P408		GTOWLO	GTIOC5B		USB_ID	CTS1_ RTS1/ SS1 RXD9/ MISO9/ SCL9	SCL0						SEG10	TS04
25	A10	16	16	12	12	10			P407	AGTIO0			RTCOUT	USB_VBUS	CTS0_ RTS0/ SS0	SDA0	SSLB3		ADTRG0			SEG11	TS03
26	B8	17	17	13	13	11	VSS_USB																
27	A9	18	18	14	14	12			P915					USB_DM									
28	B9	19	19	15	15	13			P914					USB_DP									

Pin number										Timers				Communication interfaces					Analogs			HMI	
LQFP100	LGA100	LQFP64	QFN64	LQFP48	QFN48	QFN40	Power, System, Clock, Debug, CAC, VBATT	Interrupt	I/O ports	AGT	GPT_OPS, POEG	GPT	RTC	USBFS,CAN	SCI	IIC	SPI	SSIE	ADC14	DAC12, OPAMP	ACMPLP	SLCDC	CTSU
29	A8	20	20	16	16	14	VCC_USB																
30	C8	21	21	17	17	15	VCC_USB_LDO																
31	C7	22	22	18	18			IRQ0	P206		GTIU			USB_VBUSEN	RXD0/MISO0/SCL0	SDA1	SSLB1					SEG12	TS01
32	A7	23	23				CLKOUT	IRQ1	P205	AGTO1	GTIV	GTIOC4A		USB_OVRCURA	TXD0/MOSI0/SDA0 CTS9_RTS9/SS9	SCL1	SSLB0					SEG13	TSCAP
33	B7	24	24				CACREF		P204	AGTIO1	GTIW	GTIOC4B		USB_OVRCURB	SCK0 SCK9	SCL0	RSPCKB					SEG14	TS00
34	D6								P203			GTIOC5A			CTS2_RTS2/SS2 TXD9/MOSI9/SDA9		MOSIB					SEG15	TSCAP
35	C6								P202			GTIOC5B			SCK2 RXD9/MISO9/SCL9		MISOB					SEG16	
36	A6						VSS																
37	B6						VCC																
38	D5	25	25	19	19	16	RES																
39	B5	26	26	20	20	17	MD		P201														
40	A5	27	27	21	21	18		NMI	P200														
41	C5								P307													SEG17	
42	D4								P306													SEG18	
43	A4							IRQ8	P305													SEG19	
44	B4	28	28					IRQ9	P304			GTIOC7A										SEG20	TS11
45	C4								P808													SEG21	
46	A3								P809													SEG22	
47	B3	29	29						P303			GTIOC7B										SEG03/COM7	TS02
48	B2	30	30	22	22			IRQ5	P302		GTOUUP	GTIOC4A			TXD2/MOSI2/SDA2		SSLB3					SEG02/COM6	TS08
49	C2	31	31	23	23	19		IRQ6	P301	AGTIO0	GTOULO	GTIOC4B			RXD2/MISO2/SCL2 CTS9_RTS9/SS9		SSLB2					SEG01/COM5	TS09
50	A2	32	32	24	24	20	TCK/SWCLK		P300		GTOUUP	GTIOC0A					SSLB1						
51	A1	33	33	25	25	21	TMS/SWDIO		P108		GTOULO	GTIOC0B			CTS9_RTS9/SS9		SSLB0						
52	B1	34	34	26	26	22	TDO/SWO/CLKOUT		P109		GTOVUP	GTIOC1A		CTX0	SCK1 TXD9/MOSI9/SDA9		MOSIB					SEG23	TS10
53	C3	35	35	27	27	23	TDI	IRQ3	P110		GTOVLO	GTIOC1B		CRX0	CTS2_RTS2/SS2 RXD9/MISO9/SCL9		MISOB				VCOUT	SEG24	

Pin number										Timers				Communication interfaces					Analogs			HMI	
LQFP100	LGA100	LQFP64	QFN64	LQFP48	QFN48	QFN40	Power, System, Clock, Debug, CAC, VBATT	Interrupt	I/O ports	AGT	GPT_OPS, POEG	GPT	RTC	USBFS,CAN	SCI	IIC	SPI	SSIE	ADC14	DAC12, OPAMP	ACMPLP	SLCDC	CTSU
54	D3	36	36	28	28	24		IRQ4	P111			GTIOC3A			SCK2 SCK9		RSPCKB					CAPH	TS12
55	C1	37	37	29	29	25			P112			GTIOC3B			TXD2/ MOSI2/ SDA2 SCK1		SSLB0	SSIBCK0				CAPL	TSCAP
56	E5	38	38						P113			GTIOC2A						SSILRCK0/ SSIFS0				SEG00/ COM4	TS27
57	D2								P114			GTIOC2B						SSIRXD0				SEG25	TS29
58	E4								P115			GTIOC4A						SSITXD0				SEG26	TS35
59	D1								P608			GTIOC4B										SEG27	
60	E3								P609			GTIOC5A										SEG28	
61	E2								P610			GTIOC5B										SEG29	
62	E1	39	39	30	30	26	VCC																
63	F1	40	40	31	31	27	VSS																
64	F2								P603			GTIOC7A			CTS9_ RTS9/ SS9							SEG30	
65	F3								P602			GTIOC7B			TXD9/ MOSI9/ SDA9							SEG31	
66	F4								P601			GTIOC6A			RXD9/ MISO9/ SCL9							SEG32	
67	F5								P600			GTIOC6B			SCK9							SEG33	
68	G3	41	41					KR07	P107			GTIOC0A										COM3	
69	G2	42	42					KR06	P106			GTIOC0B					SSLA3					COM2	
70	G1	43	43					KR05/ IRQ0	P105		GTETRGA	GTIOC1A					SSLA2					COM1	TS34
71	H1	44	44	32	32			KR04/ IRQ1	P104		GTETRGB	GTIOC1B			RXD0/ MISO0/ SCL0		SSLA1					COM0	TS13
72	H3	45	45	33	33			KR03	P103		GTOWUP	GTIOC2A		CTX0	CTS0_ RTS0/ SS0		SSLA0		AN019		CMPREF1	VL4	
73	J1	46	46	34	34	28		KR02	P102	AGTO0	GTOWLO	GTIOC2B		CRX0	SCK0 TXD2/ MOSI2/ SDA2		RSPCKA		AN020/ ADTRG0		CMPIN1	VL3	
74	H2	47	47	35	35	29		KR01/ IRQ1	P101	AGTEE0	GTETRGB	GTIOC5A			TXD0/ MOSI0/ SDA0 CTS1_ RTS1/ SS1	SDA1	MOSIA		AN021		CMPREF0	VL2	
75	H4	48	48	36	36	30		KR00/ IRQ2	P100	AGTIO0	GTETRGA	GTIOC5B			RXD0/ MISO0/ SCL0 SCK1	SCL1	MISOA		AN022		CMPIN0	VL1	
76	K1	49	49	37	37				P500	AGTOA0	GTIU	GTIOC2A		USB_VB USEN					AN016		CMPREF1	SEG34	
77	J2	50	50					IRQ11	P501	AGTOB0	GTIV	GTIOC2B		USB_OV RCURA	TXD1/ MOSI1/ SDA1				AN017		CMPIN1	SEG35	
78	K2	51	51					IRQ12	P502		GTIW	GTIOC3B		USB_OV RCURB	RXD1/ MISO1/ SCL1				AN018		CMPREF0	SEG36	
79	G4								P503					USB_EXI CEN	SCK1				AN023		CMPIN0	SEG37	
80	G5								P504					USB_ID	CTS1_ RTS1/ SS1				AN024				
81	G6							IRQ14	P505										AN025				
82	K3						VCC																

Pin number										Timers				Communication interfaces					Analogs			HMI	
LQFP100	LGA100	LQFP64	QFN64	LQFP48	QFN48	QFN40	Power, System, Clock, Debug, CAC, VBATT	Interrupt	I/O ports	AGT	GPT_OPS, POEG	GPT	RTC	USBFS,CAN	SCI	IIC	SPI	SSIE	ADC14	DAC12, OPAMP	ACMPLP	SLCDC	CTSU
83	J3						VSS																
84	J4	52	52	38	38	31		IRQ7	P015										AN010				TS28
85	K4	53	53	39	39	32			P014										AN009	DA0			
86	J5	54	54	40	40	33	VREFL		P013										AN008	AMP1+			
87	K5	55	55	41	41	34	VREFH		P012										AN007	AMP1-			
88	H5	56	56	42	42	35	AVCC0																
89	H6	57	57	43	43	36	AVSS0																
90	J6	58	58	44	44	37	VREFL0	IRQ15	P011										AN006	AMP2+			TS31
91	K6	59	59	45	45	38	VREFH0		P010										AN005	AMP2-			TS30
92	J7								P008										AN014				
93	H7								P007										AN013	AMP3O			
94	G7								P006										AN012	AMP3-			
95	K7							IRQ10	P005										AN011	AMP3+			
96	J8	60	60					IRQ3	P004										AN004	AMP2O			
97	H8	61	61						P003										AN003	AMP1O			
98	K8	62	62	46	46			IRQ2	P002										AN002	AMP0O			
99	K9	63	63	47	47	39		IRQ7	P001										AN001	AMP0-			TS22
100	K10	64	64	48	48	40		IRQ6	P000										AN000	AMP0+			TS21

2. Electrical Characteristics

Unless otherwise specified, the electrical characteristics of the MCU are defined under the following conditions:

VCC*1 = AVCC0 = VCC_USB*2 = VCC_USB_LDO*2 = 1.6 to 5.5V, VREFH = VREFH0 = 1.6 to AVCC0, VBATT = 1.6 to 3.6V, VSS = AVSS0 = VREFL = VREFL0 = VSS_USB = 0V, $T_a = T_{opr}$

Note 1. The typical condition is set to VCC = 3.3V.
Note 2. When USBFS is not used.

Figure 2.1 shows the timing conditions.

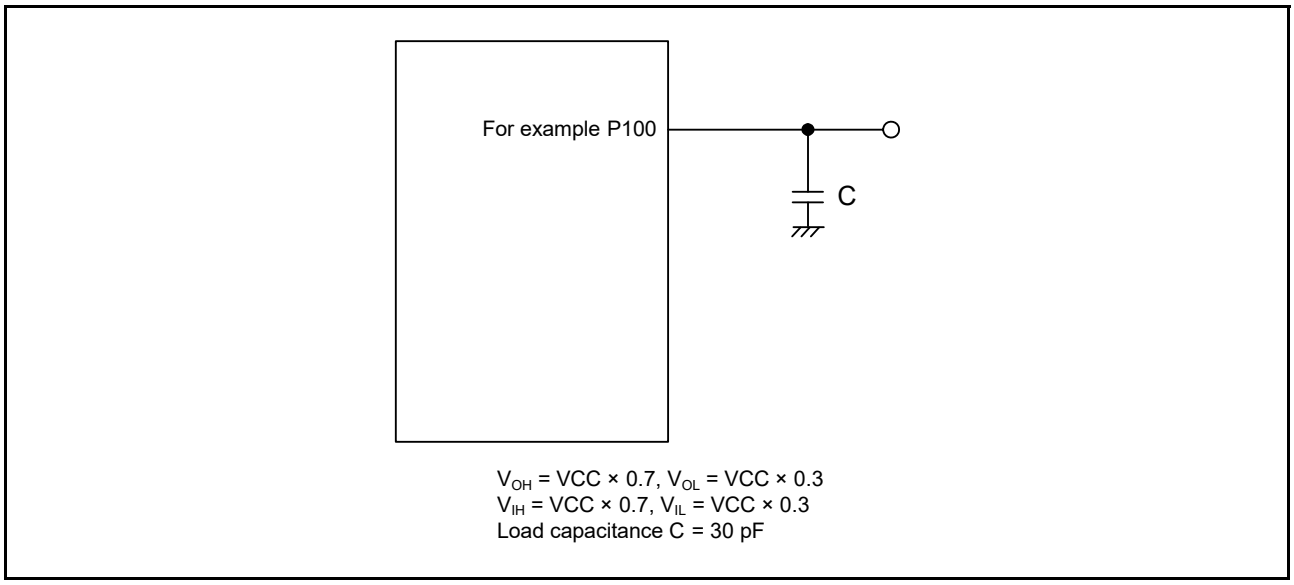

Figure 2.1 Input or output timing measurement conditions

The recommended measurement conditions for the timing specification of each peripheral provided are for the best peripheral operation. Make sure to adjust the driving abilities of each pin to meet your conditions.

Each function pin used for the same function must select the same drive ability. If the I/O drive ability of each function pin is mixed, the AC specification of each function is not guaranteed.

2.1 Absolute Maximum Ratings

Table 2.1 Absolute maximum ratings

Parameter		Symbol	Value	Unit
Power supply voltage		VCC	-0.5 to +6.5	V
Input voltage	5 V-tolerant ports*1	V_{in}	-0.3 to +6.5	V
	P000 to P008, P010 to P015	V_{in}	-0.3 to AVCC0 + 0.3	V
	Others	V_{in}	-0.3 to VCC + 0.3	V
Reference power supply voltage		VREFH0	-0.3 to +6.5	V
		VREFH		V
VBATT power supply voltage		VBATT	-0.5 to +6.5	V
Analog power supply voltage		AVCC0	-0.5 to +6.5	V
USB power supply voltage		VCC_USB	-0.5 to +6.5	V
		VCC_USB_LDO	-0.5 to +6.5	V
Analog input voltage	When AN000 to AN014 are used	V_{AN}	-0.3 to AVCC0 + 0.3	V
	When AN016 to AN025 are used		-0.3 to VCC + 0.3	V
LCD voltage	VL1 voltage	V_{L1}	-0.3 to +2.8	V
	VL2 voltage	V_{L2}	-0.3 to +6.5	V
	VL3 voltage	V_{L3}	-0.3 to +6.5	V
	VL4 voltage	V_{L4}	-0.3 to +6.5	V
Operating temperature*2,*3,*4		T_{opr}	-40 to +105	°C
			-40 to +85	
Storage temperature		T_{stg}	-55 to +125	°C

Caution: Permanent damage to the MCU may result if absolute maximum ratings are exceeded.
To preclude any malfunctions due to noise interference, insert capacitors of high frequency characteristics between the VCC and VSS pins, between the AVCC0 and AVSS0 pins, between the VCC_USB and VSS_USB pins, between the VREFH0 and VREFL0 pins, and between the VREFH and VREFL pins. Place capacitors of about 0.1 µF as close as possible to every power supply pin and use the shortest and heaviest possible traces. Also, connect capacitors as stabilization capacitance.
Connect the VCL pin to a VSS pin by a 4.7 µF capacitor. The capacitor must be placed close to the pin.
Do not input signals or an I/O pull-up power supply while the device is not powered. The current injection that results from input of such a signal or I/O pull-up might cause malfunction and the abnormal current that passes in the device at this time might cause degradation of internal elements.

Note 1. Ports P205, P206, P400 to P404, P407, P408 are 5 V tolerant.
Note 2. See section 2.2.1, Tj/Ta Definition.
Note 3. Contact a Renesas Electronics sales office for information on derating operation under T_a = +85°C to +105°C. Derating is the systematic reduction of load for improved reliability.
Note 4. The upper limit of operating temperature is +85°C or +105°C, depending on the product. For details, see section 1.3, Part Numbering.

Table 2.2 Recommended operating conditions

Parameter	Symbol	Value	Min	Typ	Max	Unit
Power supply voltages	VCC*1, *2	When USBFS is not used	1.6	-	5.5	V
		When USBFS is used USB Regulator Disable	VCC_USB	-	3.6	V
		When USBFS is used USB Regulator Enable	VCC_USB _LDO	-	5.5	V
	VSS		-	0	-	V
USB power supply voltages	VCC_USB	When USBFS is not used	-	VCC	-	V
		When USBFS is used USB Regulator Disable (Input)	3.0	3.3	3.6	V
	VCC_USB_LDO	When USBFS is not used	-	VCC	-	V
		When USBFS is used USB Regulator Disable	-	VCC	-	V
		When USBFS is used USB Regulator Enable	3.8	-	5.5	V
	VSS_USB		-	0	-	V
VBATT power supply voltage	VBATT	When the battery backup function is not used	-	VCC	-	V
		When the battery backup function is used	1.6	-	3.6	V
Analog power supply voltages	AVCC0*1, *2		1.6	-	5.5	V
	AVSS0		-	0	-	V
	VREFH0	When used as ADC14 Reference	1.6	-	AVCC0	V
	VREFL0		-	0	-	V
	VREFH	When used as DAC12 Reference	1.6	-	AVCC0	V
	VREFL		-	0	-	V

Note 1. Use AVCC0 and VCC under the following conditions:
AVCC0 and VCC can be set individually within the operating range when VCC ≥ 2.2 V and AVCC0 ≥ 2.2 V.
AVCC0 = VCC when VCC < 2.2 V or AVCC0 < 2.2 V.

Note 2. When powering on the VCC and AVCC0 pins, power them on at the same time, or power the VCC pin first and then the AVCC0 pin.

2.2 DC Characteristics

2.2.1 Tj/T_a Definition

Table 2.3 DC Characteristics

Conditions: Products with operating temperature (T_a) -40 to +105°C

Parameter	Symbol	Typ	Max	Unit	Test conditions
Permissible junction temperature	Tj	-	125	°C	High-speed mode Middle-speed mode Low-voltage mode Low-speed mode Subosc-speed mode
			105*1		

Note: Make sure that Tj = T_a + θja × total power consumption (W),
where total power consumption = (VCC - V_{OH}) × ΣI_{OH} + V_{OL} × ΣI_{OL} + I_{CC}max × VCC.

Note 1. The upper limit of operating temperature is +85°C or +105°C, depending on the product. For details, see section 1.3, Part Numbering. If the part number shows the operation temperature at 85°C, then the maximum value of T_j is +105°C, otherwise, it is +125°C.

2.2.2 I/O V_{IH}, V_{IL}

Table 2.4 I/O V_{IH}, V_{IL} (1)

Conditions: VCC = AVCC0 = VCC_USB = VCC_USB_LDO = 2.7 to 5.5V, VBATT = 1.6 to 3.6 V, VSS = AVSS0 = 0 V

Parameter		Symbol	Min	Typ	Max	Unit	Test conditions
Schmitt trigger input voltage	IIC*1 (except for SMBus)	V_{IH}	VCC × 0.7	-	5.8	V	-
		V_{IL}	-	-	VCC × 0.3		
		ΔV_T	VCC × 0.05	-	-		
	RES, NMI Other peripheral input pins excluding IIC	V_{IH}	VCC × 0.8	-	-		
		V_{IL}	-	-	VCC × 0.2		
		ΔV_T	VCC × 0.1	-	-		
Input voltage (except for Schmitt trigger input pin)	IIC (SMBus)*2	V_{IH}	2.2	-	-		VCC = 3.6 to 5.5 V
		V_{IH}	2.0	-	-		VCC = 2.7 to 3.6 V
		V_{IL}	-	-	0.8		-
	5 V-tolerant ports*3	V_{IH}	VCC × 0.8	-	5.8		
		V_{IL}	-	-	VCC × 0.2		
	P914, P915	V_{IH}	VCC_USB × 0.8	-	VCC_USB + 0.3		
		V_{IL}	-	-	VCC_USB × 0.2		
	P000 to P008, P010 to P015	V_{IH}	AVCC0 × 0.8	-	-		
		V_{IL}	-	-	AVCC0 × 0.2		
	EXTAL Input ports pins except for P000 to P008, P010 to P015, P914, P915	V_{IH}	VCC × 0.8	-	-		
		V_{IL}	-	-	VCC × 0.2		
When V_{BATT} power supply is selected	P402, P403, P404	V_{IH}	V_{BATT} × 0.8	-	V_{BATT} + 0.3		
		V_{IL}	-	-	V_{BATT} × 0.2		
		ΔV_T	V_{BATT} × 0.05	-	-		

Note 1. P205, P206, P400, P401, P407, P408 (total 6 pins).
Note 2. P100, P101, P204, P205, P206, P400, P401, P407, P408 (total 9 pins).
Note 3. P205, P206, P400 to P404, P407, P408 (total 9 pins).

Table 2.5 I/O V_{IH}, V_{IL} (2)

Conditions: VCC = AVCC0 = VCC_USB = VCC_USB_LDO = 1.6 to 2.7 V, VBATT = 1.6 to 3.6 V, VSS = AVSS0 = 0 V

Parameter		Symbol	Min	Typ	Max	Unit	Test conditions
Schmitt trigger input voltage	RES, NMI Peripheral input pins	V_{IH}	VCC × 0.8	-	-	V	-
		V_{IL}	-	-	VCC × 0.2		
		ΔV_T	VCC × 0.01	-	-		
Input voltage (except for Schmitt trigger input pin)	5 V-tolerant ports*1	V_{IH}	VCC × 0.8	-	5.8		
		V_{IL}	-	-	VCC × 0.2		
	P914, P915	V_{IH}	VCC_USB × 0.8	-	VCC_USB + 0.3		
		V_{IL}	-	-	VCC_USB × 0.2		
	P000 to P008, P010 to P015	V_{IH}	AVCC0 × 0.8	-	-		
		V_{IL}	-	-	AVCC0 × 0.2		
	EXTAL Input ports pins except for P000 to P008, P010 to P015, P914, P915	V_{IH}	VCC × 0.8	-	-		
		V_{IL}	-	-	VCC × 0.2		
When V_{BATT} power supply is selected	P402, P403, P404	V_{IH}	V_{BATT} × 0.8	-	V_{BATT} + 0.3		
		V_{IL}	-	-	V_{BATT} × 0.2		
		ΔV_T	V_{BATT} × 0.01	-	-		

Note 1. P205, P206, P400 to P404, P407, P408 (total 9 pins)

2.2.3 I/O I_{OH}, I_{OL}

Table 2.6 I/O I_{OH}, I_{OL} (1 of 2)
Conditions: VCC = AVCC0 = VCC_USB = VCC_USB_LCO = 1.6 to 5.5 V

Parameter			Symbol	Min	Typ	Max	Unit
Permissible output current (average value per pin)	Ports P212, P213	-	I_{OH}	-	-	-4.0	mA
			I_{OL}	-	-	4.0	mA
	Port P408	Low drive*1	I_{OH}	-	-	-4.0	mA
			I_{OL}	-	-	4.0	mA
		Middle drive for IIC Fast-mode*4 VCC = 2.7 to 5.5 V	I_{OH}	-	-	-8.0	mA
			I_{OL}	-	-	8.0	mA
		Middle drive*2 VCC = 3.0 to 5.5 V	I_{OH}	-	-	-20.0	mA
			I_{OL}	-	-	20.0	mA
	Port P409	Low drive*1	I_{OH}	-	-	-4.0	mA
			I_{OL}	-	-	4.0	mA
		Middle drive*2 VCC = 2.7 to 3.0 V	I_{OH}	-	-	-8.0	mA
			I_{OL}	-	-	8.0	mA
		Middle drive*2 VCC = 3.0 to 5.5 V	I_{OH}	-	-	-20.0	mA
			I_{OL}	-	-	20.0	mA
	Ports P100 to P115, P201 to P204, P300 to P307, P500 to P503, P600 to P603, P608 to P610, P808, P809 (total 41 pins)	Low drive*1	I_{OH}	-	-	-4.0	mA
			I_{OL}	-	-	4.0	mA
		Middle drive*2	I_{OH}	-	-	-4.0	mA
			I_{OL}	-	-	8.0	mA
	Ports P914, P915	-	I_{OH}	-	-	-4.0	mA
			I_{OL}	-	-	4.0	mA
	Other output pin*3	Low drive*1	I_{OH}	-	-	-4.0	mA
			I_{OL}	-	-	4.0	mA
		Middle drive*2	I_{OH}	-	-	-8.0	mA
			I_{OL}	-	-	8.0	mA

Table 2.6 I/O I_{OH}, I_{OL} (2 of 2)

Conditions: VCC = AVCC0 = VCC_USB = VCC_USB_LCO = 1.6 to 5.5 V

Parameter			Symbol	Min	Typ	Max	Unit
Permissible output current (Max value per pin)	Ports P212, P213	-	I_{OH}	-	-	-4.0	mA
			I_{OL}	-	-	4.0	mA
	Port P408	Low drive*1	I_{OH}	-	-	-4.0	mA
			I_{OL}	-	-	4.0	mA
		Middle drive for IIC Fast-mode*4 VCC = 2.7 to 5.5 V	I_{OH}	-	-	-8.0	mA
			I_{OL}	-	-	8.0	mA
		Middle drive*2 VCC = 3.0 to 5.5 V	I_{OH}	-	-	-20.0	mA
			I_{OL}	-	-	20.0	mA
	Port P409	Low drive*1	I_{OH}	-	-	-4.0	mA
			I_{OL}	-	-	4.0	mA
		Middle drive*2 VCC = 2.7 to 3.0 V	I_{OH}	-	-	-8.0	mA
			I_{OL}	-	-	8.0	mA
		Middle drive*2 VCC = 3.0 to 5.5 V	I_{OH}	-	-	-20.0	mA
			I_{OL}	-	-	20.0	mA
	Ports P100 to P115, P201 to P204, P300 to P307, P500 to P503, P600 to P603, P608 to P610, P808, P809 (total 41 pins)	Low drive*1	I_{OH}	-	-	-4.0	mA
			I_{OL}	-	-	4.0	mA
		Middle drive*2	I_{OH}	-	-	-4.0	mA
			I_{OL}	-	-	8.0	mA
	Ports P914, P915	-	I_{OH}	-	-	-4.0	mA
			I_{OL}	-	-	4.0	mA
	Other output pin*3	Low drive*1	I_{OH}	-	-	-4.0	mA
			I_{OL}	-	-	4.0	mA
		Middle drive*2	I_{OH}	-	-	-8.0	mA
			I_{OL}	-	-	8.0	mA
Permissible output current (max value total pins)	Total of ports P000 to P008, P010 to P015		$\Sigma I_{OH\ (max)}$	-	-	-30	mA
			$\Sigma I_{OL\ (max)}$	-	-	30	mA
	Ports P914, P915		$\Sigma I_{OH\ (max)}$	-	-	-2.0	mA
			$\Sigma I_{OL\ (min)}$	-	-	2.0	mA
	Total of all output pin*5		$\Sigma I_{OH\ (max)}$	-	-	-60	mA
			$\Sigma I_{OL\ (max)}$	-	-	60	mA

Caution: To protect the reliability of the MCU, the output current values should not exceed the values in this table. The average output current indicates the average value of current measured during 100 µs.

Note 1. This is the value when low driving ability is selected with the Port Drive Capability bit in PmnPFS register.
Note 2. This is the value when middle driving ability is selected with the Port Drive Capability bit in PmnPFS register.
Note 3. Except for ports P200, P214, P215, which are input ports.
Note 4. This is the value when middle driving ability for IIC Fast-mode is selected with the Port Drive Capability bit in PmnPFS register.
Note 5. For details on the permissible output current used with CTSU, see section 2.11, CTSU Characteristics.

2.2.4 I/O V_{OH}, V_{OL}, and Other Characteristics

Table 2.7 I/O V_{OH}, V_{OL} (1)
Conditions: VCC = AVCC0 = VCC_USB = VCC_USB_LCO = 4.0 to 5.5 V

Parameter			Symbol	Min	Typ	Max	Unit	Test conditions
Output voltage	IIC*1		V_{OL}	-	-	0.4	V	I_{OL} = 3.0 mA
			V_{OL}*2,*5	-	-	0.6		I_{OL} = 6.0 mA
	Ports P408, P409*2, *3		V_{OH}	VCC - 1.0	-	-		I_{OH} = -20 mA
			V_{OL}	-	-	1.0		I_{OL} = 20 mA
	Ports P000 to P008, P010 to P015	Low drive	V_{OH}	AVCC0 - 0.8	-	-		I_{OH} = -2.0 mA
			V_{OL}	-	-	0.8		I_{OL} = 2.0 mA
		Middle drive	V_{OH}	AVCC0 - 0.8	-	-		I_{OH} = -4.0 mA
			V_{OL}	-	-	0.8		I_{OL} = 4.0 mA
	Ports P914, P915		V_{OH}	VCC_USB - 0.8	-	-		I_{OH} = -2.0 mA
			V_{OL}	-	-	0.8		I_{OL} = 2.0 mA
	Other output pins*4	Low drive	V_{OH}	VCC - 0.8	-	-		I_{OH} = -2.0 mA
			V_{OL}	-	-	0.8		I_{OL} = 2.0 mA
		Middle drive*6	V_{OH}	VCC - 0.8	-	-		I_{OH} = -4.0 mA
			V_{OL}	-	-	0.8		I_{OL} = 4.0 mA

Note 1. P100, P101, P204, P205, P206, P400, P401, P407, P408 (total 9 pins).
Note 2. This is the value when middle driving ability is selected with the Port Drive Capability bit in PmnPFS register.
Note 3. Based on characterization data, not tested in production.
Note 4. Except for ports P200, P214, P215, which are input ports.
Note 5. This is the value when middle driving ability for IIC is selected in the Port Drive Capability bit in PmnPFS register for P408.
Note 6. Except for P212, P213.

Table 2.8 I/O V_{OH}, V_{OL} (2)
Conditions: VCC = AVCC0 = VCC_USB = VCC_USB_LCO = 2.7 to 4.0 V

Parameter			Symbol	Min	Typ	Max	Unit	Test conditions
Output voltage	IIC*1		V_{OL}	-	-	0.4	V	I_{OL} = 3.0 mA
			V_{OL}*2,*5	-	-	0.6		I_{OL} = 6.0 mA
	Ports P408, P409*2, *3		V_{OH}	VCC - 1.0	-	-		I_{OH} = -20 mA VCC = 3.3 V
			V_{OL}	-	-	1.0		I_{OL} = 20 mA VCC = 3.3 V
	Ports P000 to P008, P010 to P015	Low drive	V_{OH}	AVCC0 - 0.5	-	-		I_{OH} = -1.0 mA
			V_{OL}	-	-	0.5		I_{OL} = 1.0 mA
		Middle drive	V_{OH}	AVCC0 - 0.5	-	-		I_{OH} = -2.0 mA
			V_{OL}	-	-	0.5		I_{OL} = 2.0 mA
	Ports P914, P915		V_{OH}	VCC_USB - 0.5	-	-		I_{OH} = -1.0 mA
			V_{OL}	-	-	0.5		I_{OL} = 1.0 mA
	Other output pins*4	Low drive	V_{OH}	VCC - 0.5	-	-		I_{OH} = -1.0 mA
			V_{OL}	-	-	0.5		I_{OL} = 1.0 mA
		Middle drive*6	V_{OH}	VCC - 0.5	-	-		I_{OH} = -2.0 mA
			V_{OL}	-	-	0.5		I_{OL} = 2.0 mA

Note 1. P100, P101, P204, P205, P206, P400, P401, P407, P408 (total 9 pins).
Note 2. This is the value when middle driving ability is selected with the Port Drive Capability bit in PmnPFS register.
Note 3. Based on characterization data, not tested in production.
Note 4. Except for ports P200, P214, P215, which are input ports.
Note 5. This is the value when middle driving ability for IIC is selected in the Port Drive Capability bit in PmnPFS register for P408.
Note 6. Except for P212, P213.

Table 2.9 I/O V_{OH}, V_{OL} (3)
Conditions: VCC = AVCC0 = VCC_USB = VCC_USB_LCO = 1.6 to 2.7 V

Parameter			Symbol	Min	Typ	Max	Unit	Test conditions
Output voltage	Ports P000 to P015	Low drive	V_{OH}	AVCC0 - 0.3	-	-	V	I_{OH} = -0.5 mA
			V_{OL}	-	-	0.3		I_{OL} = 0.5 mA
		Middle drive	V_{OH}	AVCC0 - 0.3	-	-		I_{OH} = -1.0 mA
			V_{OL}	-	-	0.3		I_{OL} = 1.0 mA
	Ports P914, P915		V_{OH}	VCC_USB - 0.3	-	-		I_{OH} = -0.5 mA
			V_{OL}	-	-	0.3		I_{OL} = 0.5 mA
	Other output pins*1	Low drive	V_{OH}	VCC - 0.3	-	-		I_{OH} = -0.5 mA
			V_{OL}	-	-	0.3		I_{OL} = 0.5 mA
		Middle drive*2	V_{OH}	VCC - 0.3	-	-		I_{OH} = -1.0 mA
			V_{OL}	-	-	0.3		I_{OL} = 1.0 mA

Note 1. Except for ports P200, P214, P215, which are input ports.
Note 2. Except for P212, P213.

Table 2.10 I/O other characteristics
Conditions: VCC = AVCC0 = 1.6 to 5.5 V

Parameter		Symbol	Min	Typ	Max	Unit	Test conditions
Input leakage current	RES, P200, P214, P215	$\lvert I_{in} \rvert$	-	-	1.0	μA	V_{in} = 0 V V_{in} = VCC
Three-state leakage current (off state)	5 V-tolerant ports	$\lvert I_{TSI} \rvert$	-	-	1.0	μA	V_{in} = 0 V V_{in} = 5.8 V
	Other ports (except for ports P200, P214, P215 and 5 V tolerant)		-	-	1.0		V_{in} = 0 V V_{in} = VCC
Input pull-up resistor	All ports (except for ports P200, P214, P215, P914, P915)	R_U	10	20	50	kΩ	V_{in} = 0 V
Input capacitance	P914, P915, P100 to P103, P111, P112, P200	C_{in}	-	-	30	pF	V_{in} = 0 V f = 1 MHz T_a = 25°C
	Other input pins		-	-	15		

2.2.5 I/O Pin Output Characteristics of Low Drive Capacity

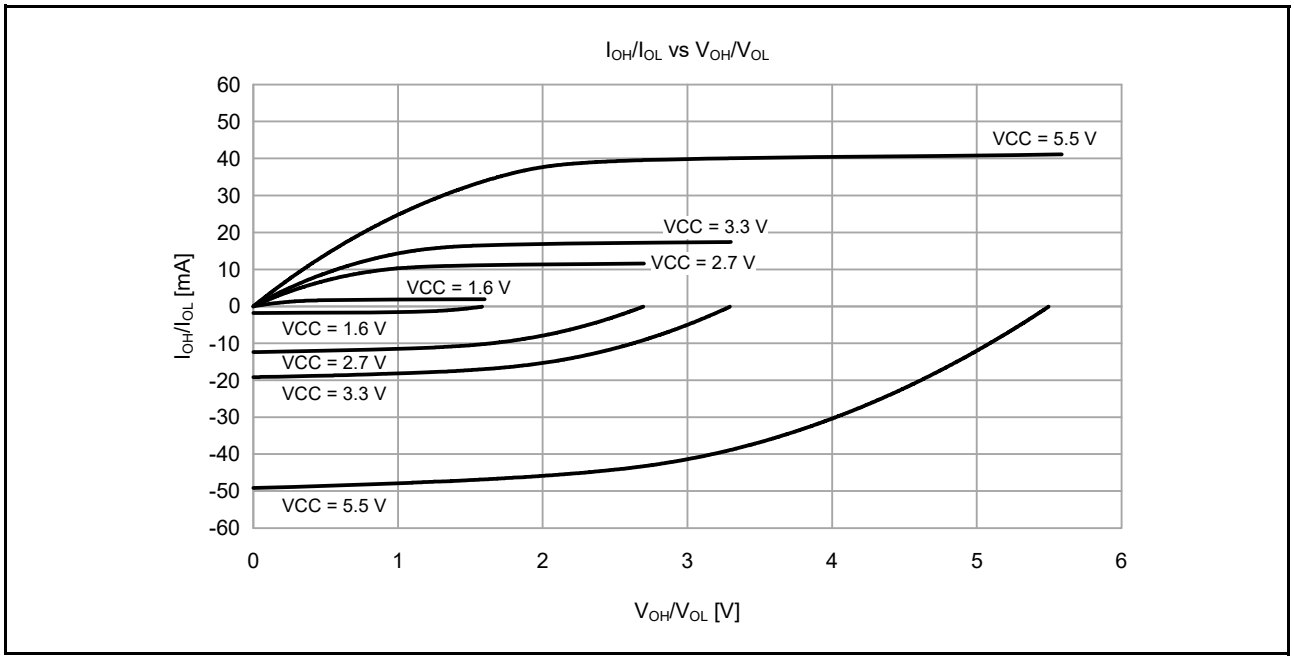

Figure 2.2 **V_{OH}/V_{OL} and I_{OH}/I_{OL} Voltage Characteristics at T_a = 25°C when low drive output is selected (reference data)**

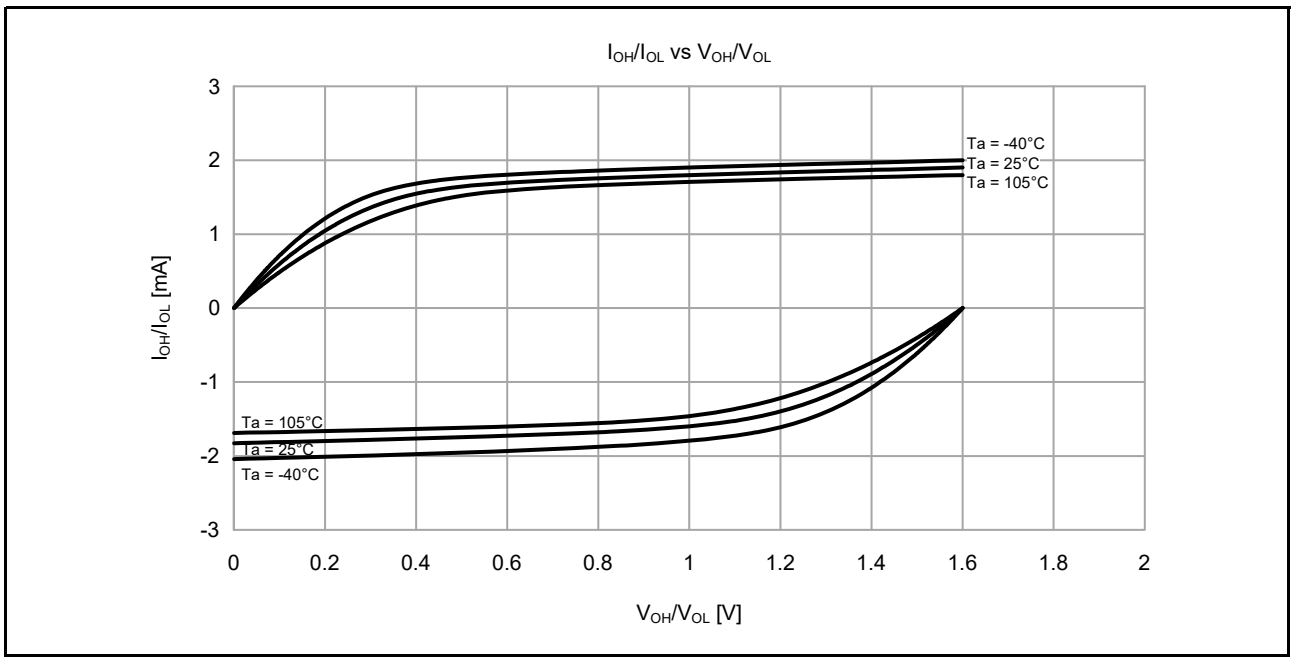

Figure 2.3 **V_{OH}/V_{OL} and I_{OH}/I_{OL} temperature characteristics at VCC = 1.6 V when low drive output is selected (reference data)**

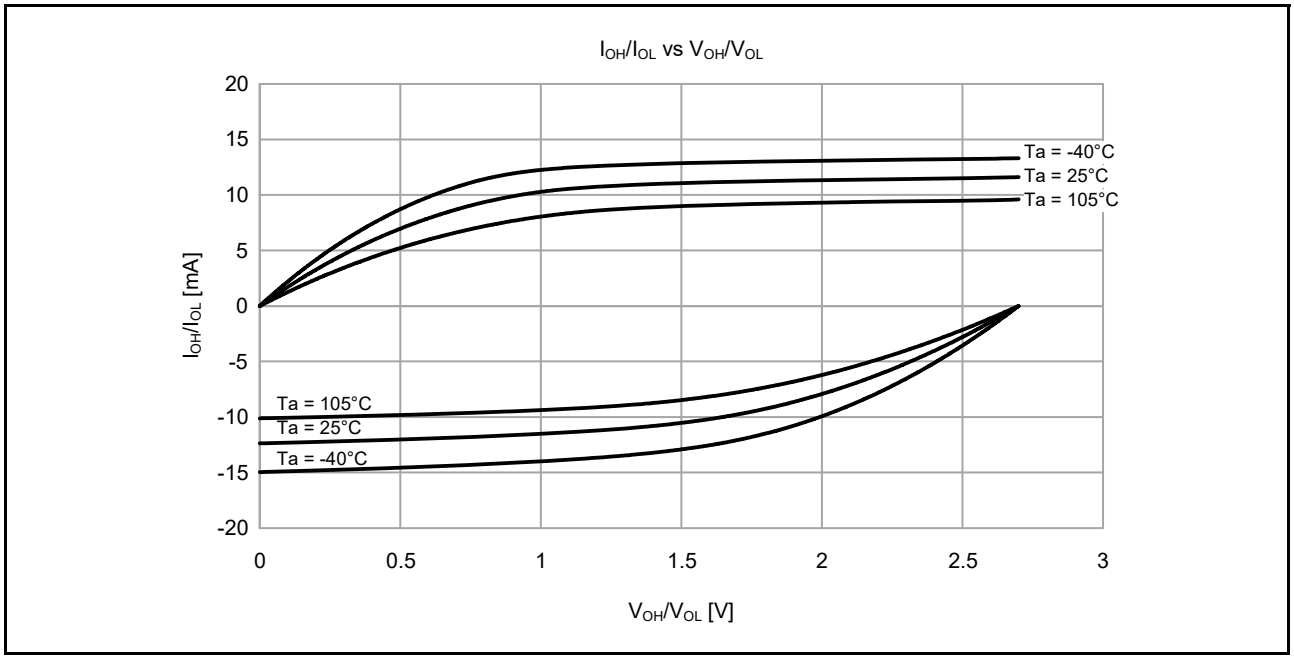

Figure 2.4 **V_{OH}/V_{OL} and I_{OH}/I_{OL} temperature characteristics at VCC = 2.7 V when low drive output is selected (reference data)**

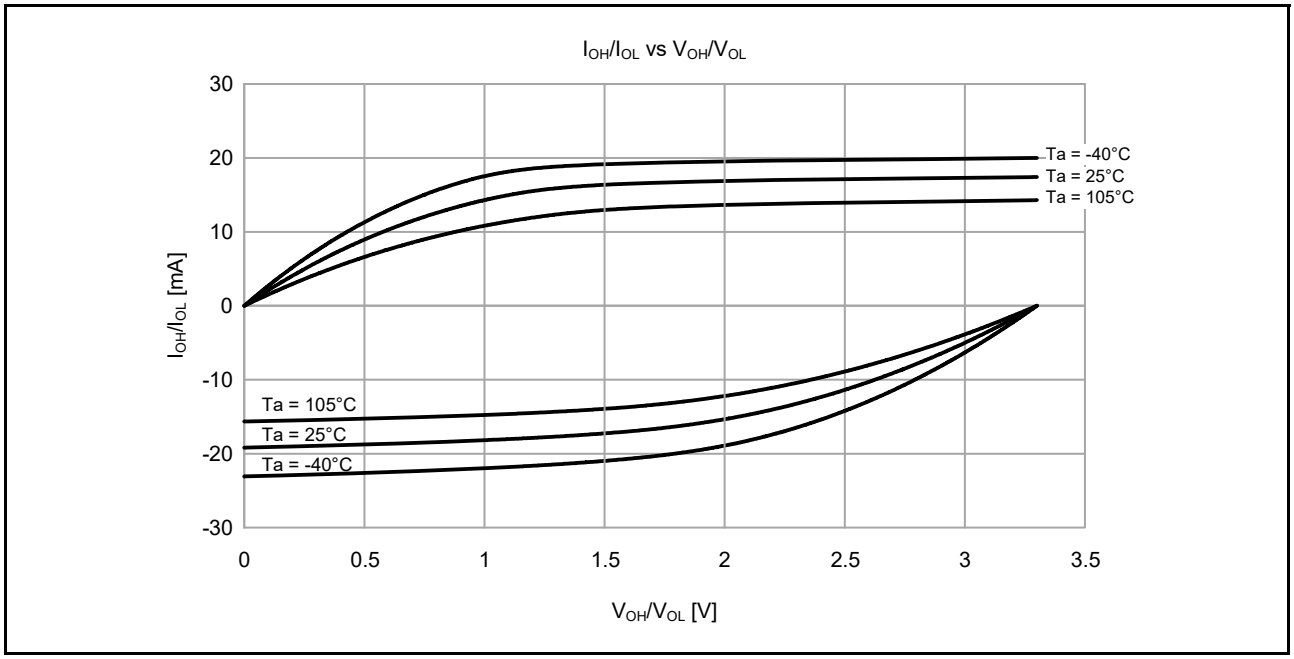

Figure 2.5 **V_{OH}/V_{OL} and I_{OH}/I_{OL} temperature characteristics at VCC = 3.3 V when low drive output is selected (reference data)**

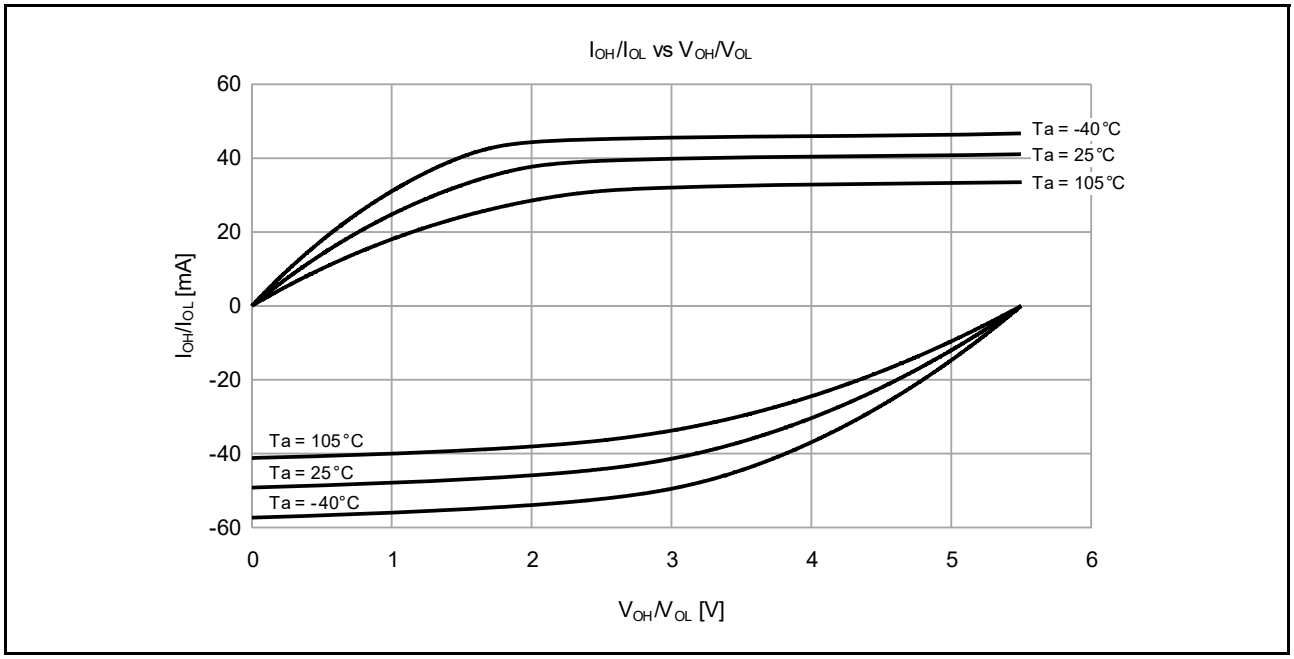

Figure 2.6 **V_{OH}/V_{OL} and I_{OH}/I_{OL} temperature characteristics at VCC = 5.5 V when low drive output is selected (reference data)**

2.2.6 I/O Pin Output Characteristics of Middle Drive Capacity

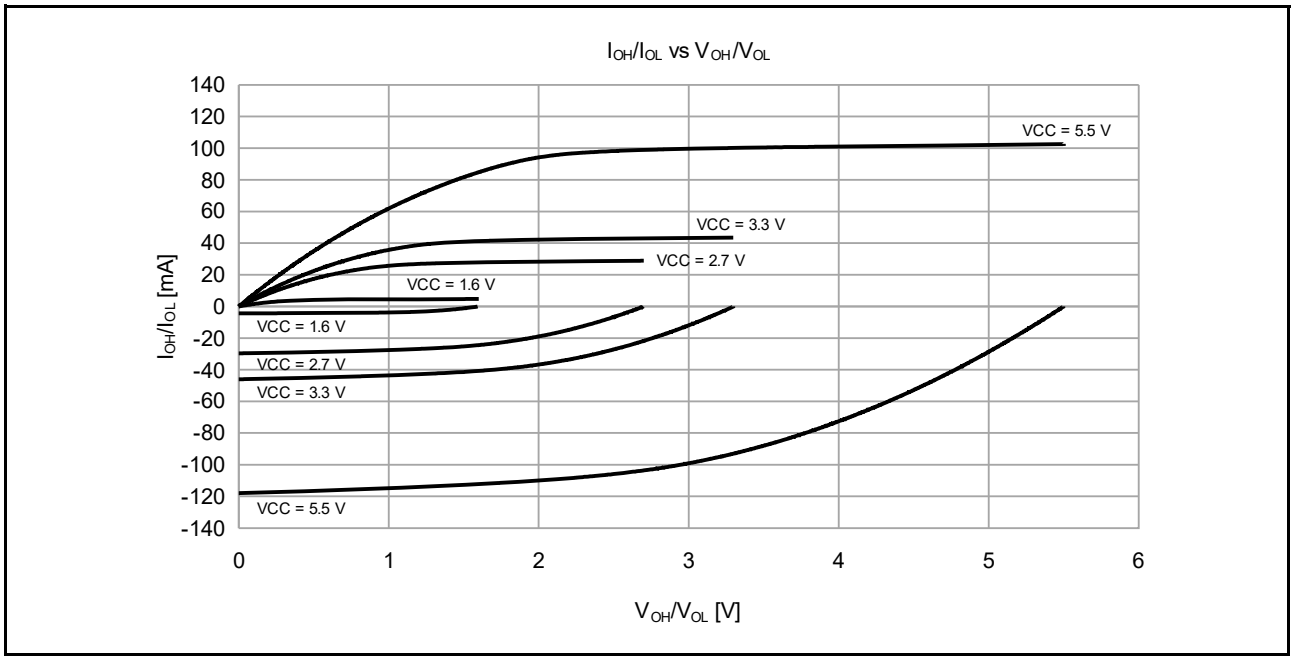

Figure 2.7 **V_{OH}/V_{OL} and I_{OH}/I_{OL} voltage characteristics at T_a = 25°C when middle drive output is selected (reference data)**

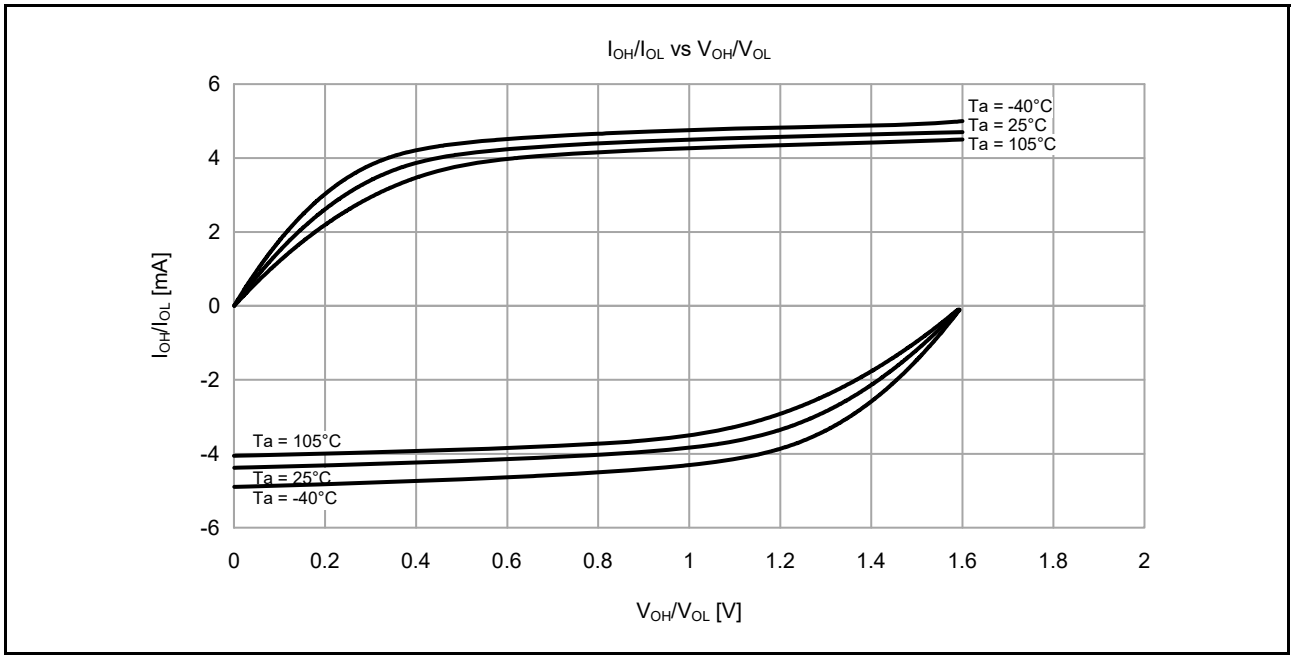

Figure 2.8 **V_{OH}/V_{OL} and I_{OH}/I_{OL} temperature characteristics at VCC = 1.6 V when middle drive output is selected (reference data)**

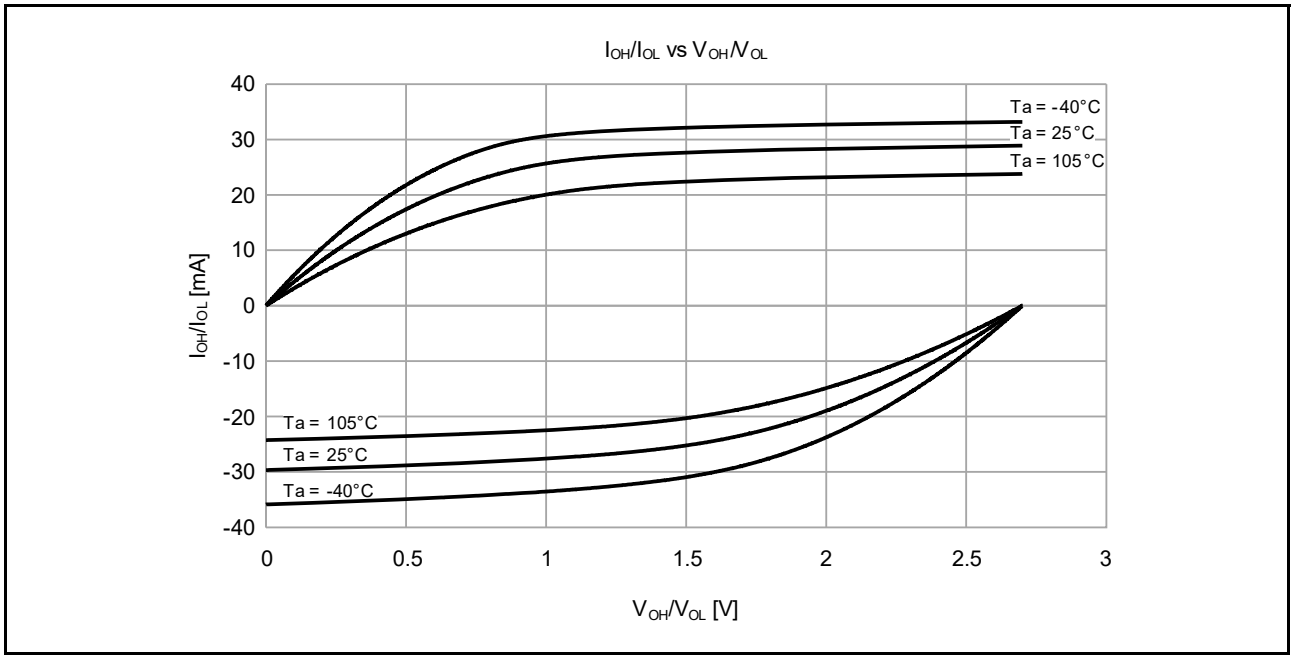

Figure 2.9 **V_{OH}/V_{OL} and I_{OH}/I_{OL} temperature characteristics at VCC = 2.7 V when middle drive output is selected (reference data)**

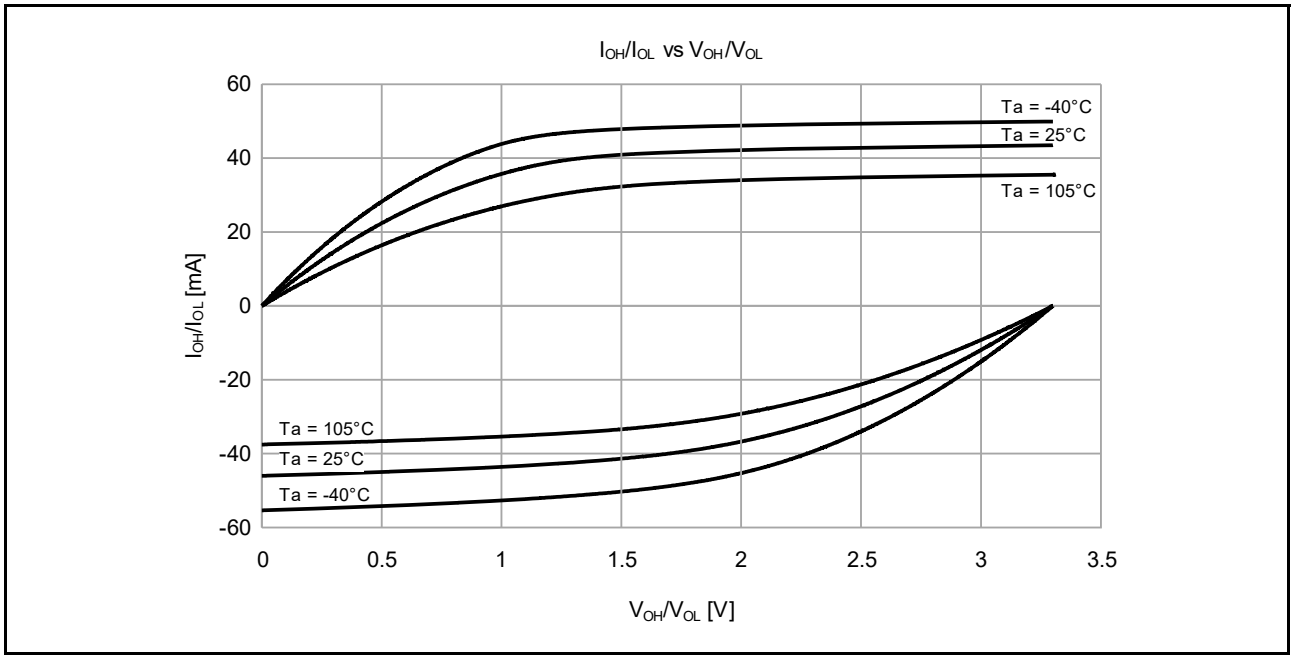

Figure 2.10 **V_{OH}/V_{OL} and I_{OH}/I_{OL} temperature characteristics at VCC = 3.3 V when middle drive output is selected (reference data)**

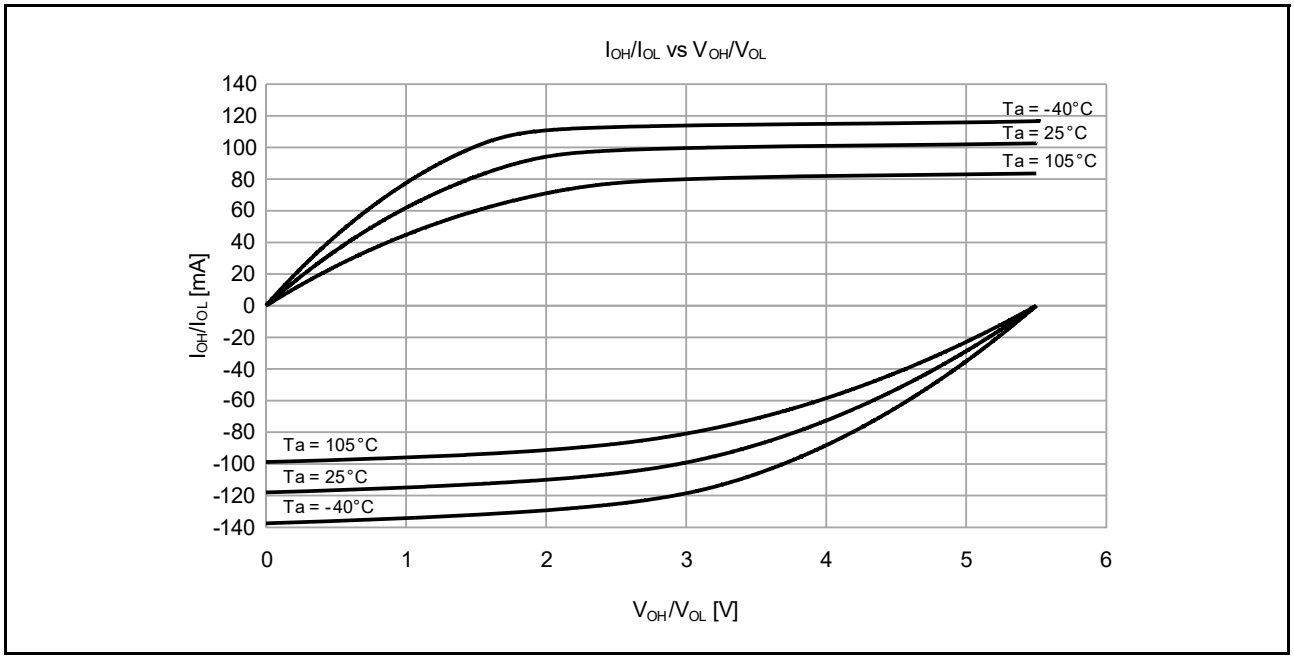

Figure 2.11 **V_{OH}/V_{OL} and I_{OH}/I_{OL} temperature characteristics at VCC = 5.5 V when middle drive output is selected (reference data)**

2.2.7 P408, P409 I/O Pin Output Characteristics of Middle Drive Capacity

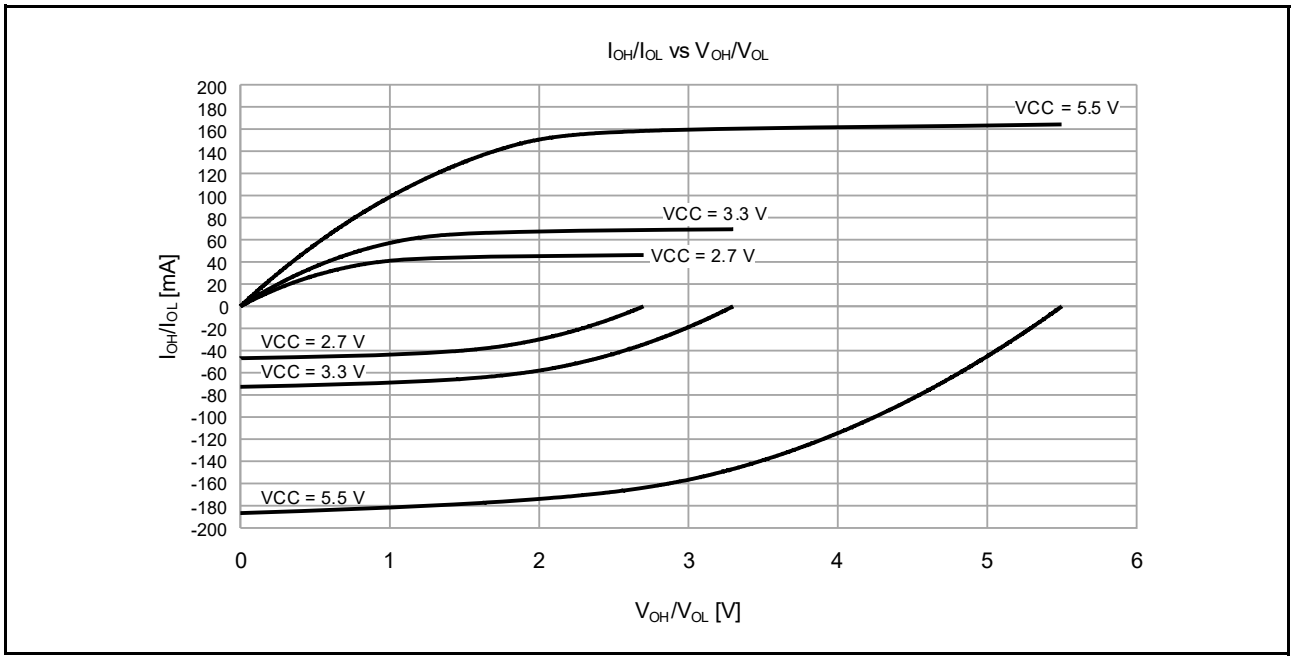

Figure 2.12 **V_{OH}/V_{OL} and I_{OH}/I_{OL} voltage characteristics at Ta = 25°C when middle drive output is selected (reference data)**

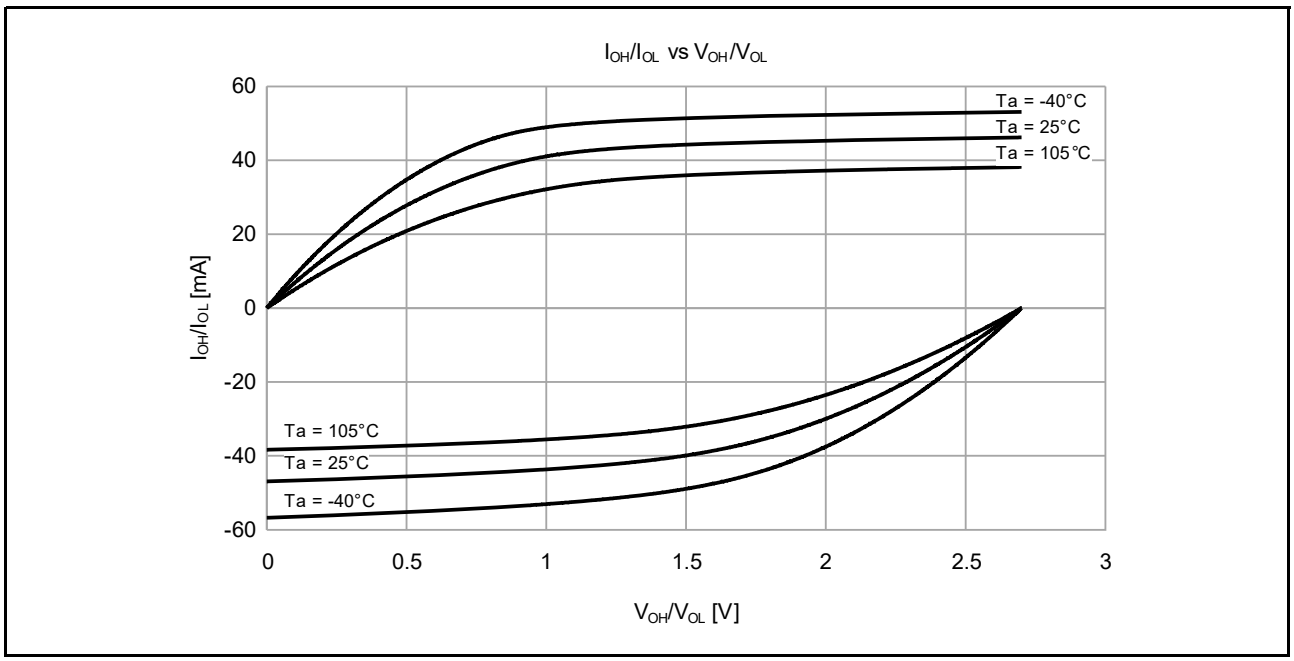

Figure 2.13 **V_{OH}/V_{OL} and I_{OH}/I_{OL} temperature characteristics at VCC = 2.7 V when middle drive output is selected (reference data)**

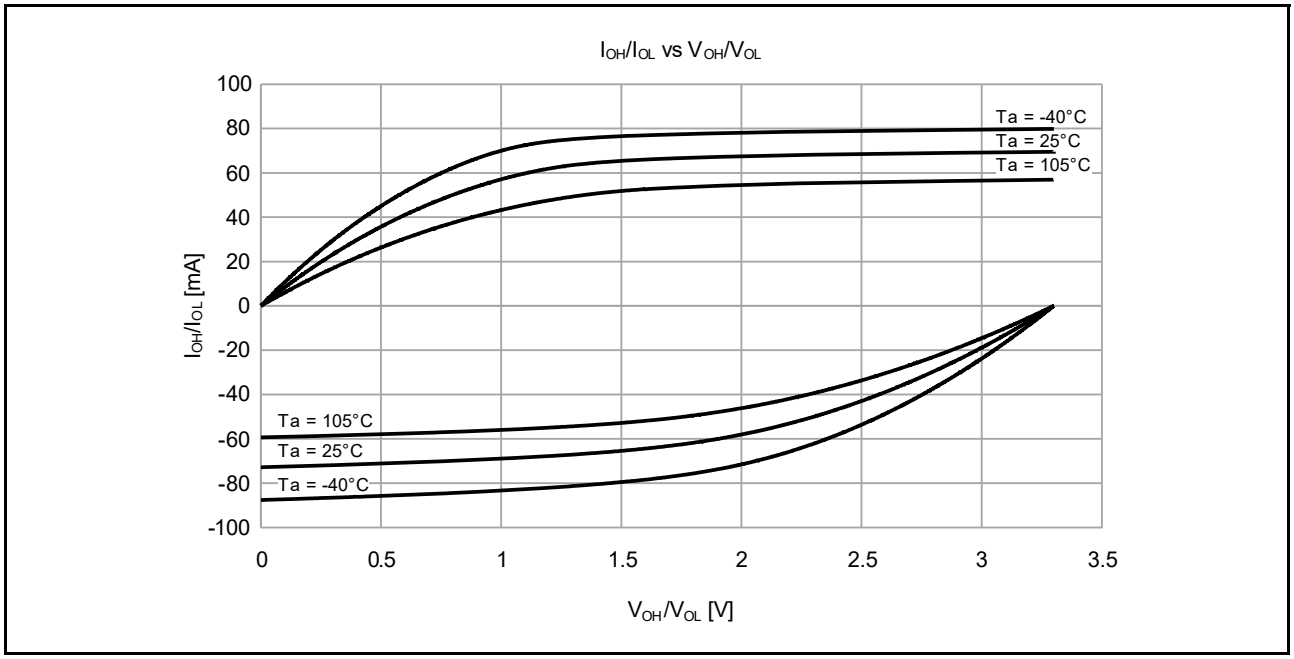

Figure 2.14 **V_{OH}/V_{OL} and I_{OH}/I_{OL} temperature characteristics at VCC = 3.3 V when middle drive output is selected (reference data)**

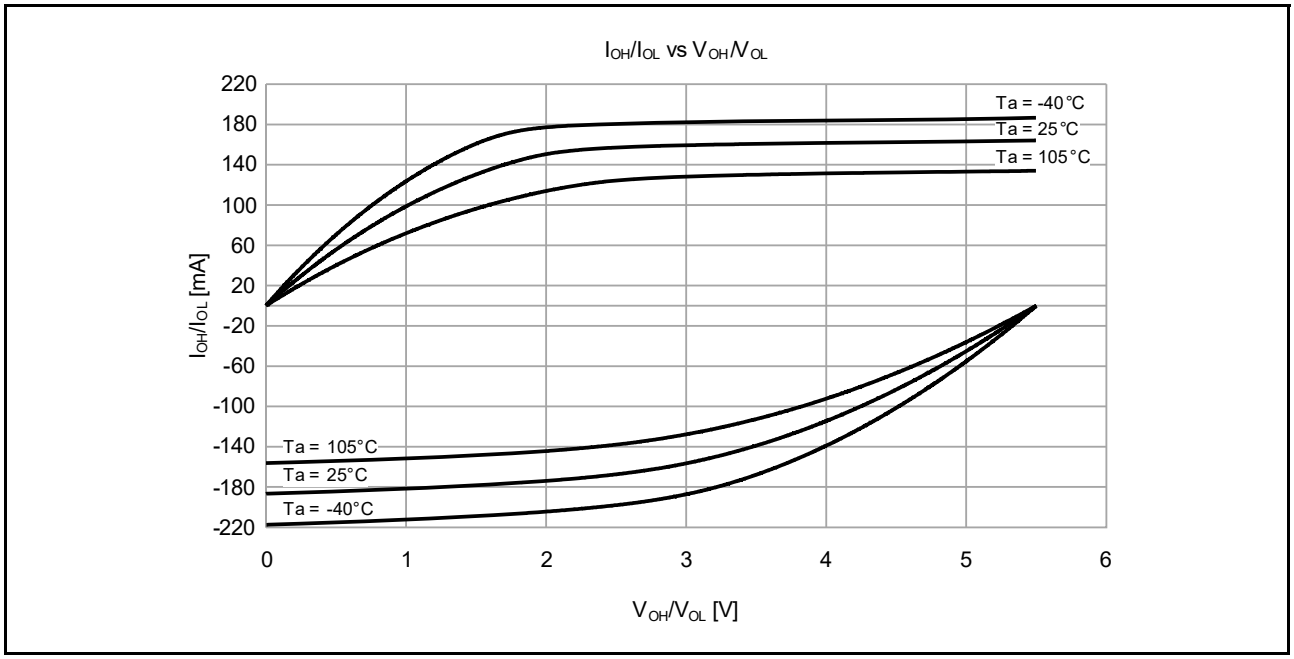

Figure 2.15 **V_{OH}/V_{OL} and I_{OH}/I_{OL} temperature characteristics at VCC = 5.5 V when middle drive output is selected (reference data)**

2.2.8 IIC I/O Pin Output Characteristics

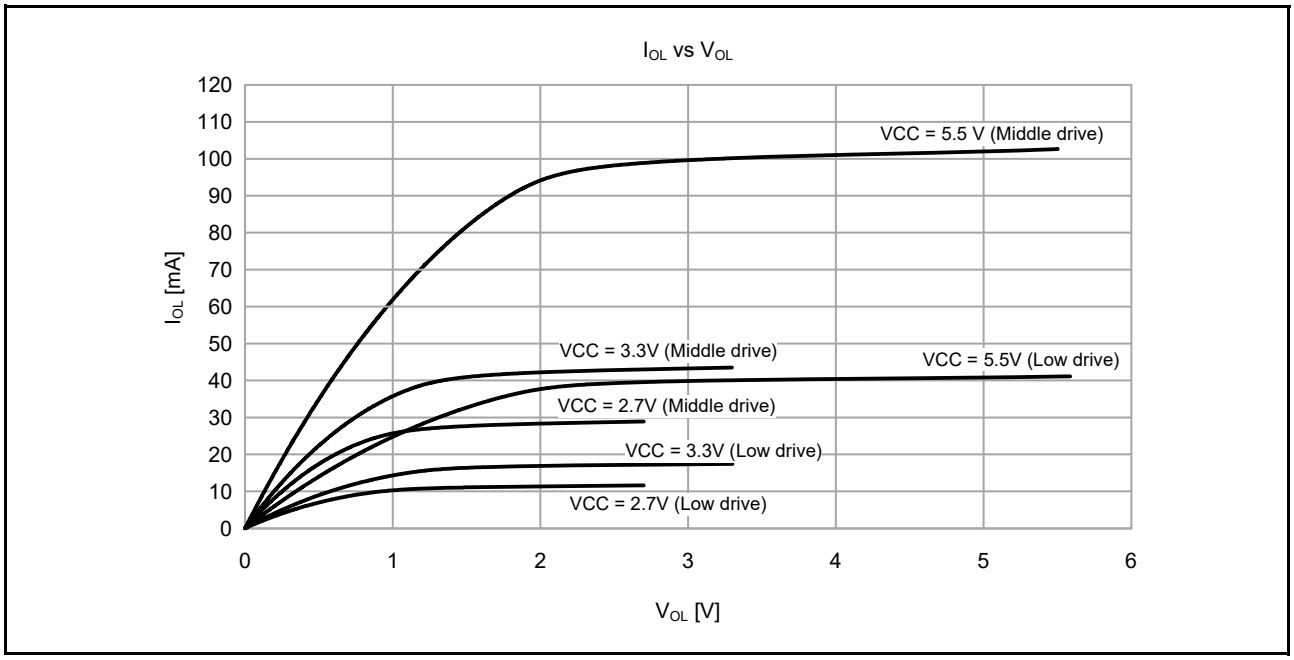

Figure 2.16 **V_{OH}/V_{OL} and I_{OH}/I_{OL} voltage characteristics at Ta = 25°C**

2.2.9 Operating and Standby Current

Table 2.11 Operating and standby current (1) (1 of 2)
Conditions: VCC = AVCC0 = 1.6 to 5.5 V

Parameter					Symbol	Typ*10	Max	Unit	Test conditions
Supply current*1	High-speed mode*2	Normal mode	All peripheral clock disabled, while (1) code executing from flash*5	ICLK = 48 MHz	I_{CC}	8.3	-	mA	*7
				ICLK = 32 MHz		5.8	-		
				ICLK = 16 MHz		3.5	-		
				ICLK = 8 MHz		2.2	-		
			All peripheral clock disabled, CoreMark code executing from flash*5	ICLK = 48 MHz		16.4	-		
				ICLK = 32 MHz		11.3	-		
				ICLK = 16 MHz		6.4	-		
				ICLK = 8 MHz		4.0	-		
			All peripheral clock enabled, while (1) code executing from flash*5	ICLK = 48 MHz		18.5	-		*9
				ICLK = 32 MHz		13.8	-		*8
				ICLK = 16 MHz		7.7	-		
				ICLK = 8 MHz		4.5	-		
			All peripheral clock enabled, code executing from SRAM*5	ICLK = 48 MHz		-	50.0		*9
		Sleep mode	All peripheral clock disabled*5	ICLK = 48 MHz		3.3	-		*7
				ICLK = 32 MHz		2.4	-		
				ICLK = 16 MHz		1.8	-		
				ICLK = 8 MHz		1.4	-		
			All peripheral clock enabled*5	ICLK = 48 MHz		13.4	-		*9
				ICLK = 32 MHz		10.4	-		*8
				ICLK = 16 MHz		6.0	-		
				ICLK = 8 MHz		3.6	-		
		Increase during BGO operation*6				2.5	-		-
	Middle-speed mode*2	Normal mode	All peripheral clock disabled, while (1) code executing from flash*5	ICLK = 12 MHz	I_{CC}	2.5	-	mA	*7
				ICLK = 8 MHz		2.0	-		
				ICLK = 1 MHz		0.9	-		
			All peripheral clock disabled, CoreMark code executing from flash*5	ICLK = 12 MHz		4.7	-		
				ICLK = 8 MHz		3.7	-		
				ICLK = 1 MHz		1.2	-		
			All peripheral clock enabled, while (1) code executing from flash*5	ICLK = 12 MHz		5.7	-		*8
				ICLK = 8 MHz		4.3	-		
				ICLK = 1 MHz		1.5	-		
			All peripheral clock enabled, code executing from SRAM*5	ICLK = 12 MHz		-	20.0		
		Sleep mode	All peripheral clock disabled*5	ICLK = 12 MHz		1.2	-		*7
				ICLK = 8 MHz		1.2	-		
				ICLK = 1 MHz		0.8	-		
			All peripheral clock enabled*5	ICLK = 12 MHz		4.4	-		*8
				ICLK = 8 MHz		3.4	-		
				ICLK = 1 MHz		1.4	-		
		Increase during BGO operation*6				2.5	-		-

Table 2.11 Operating and standby current (1) (2 of 2)
Conditions: VCC = AVCC0 = 1.6 to 5.5 V

Parameter					Symbol	Typ*10	Max	Unit	Test conditions
Supply current*1	Low-speed mode*3	Normal mode	All peripheral clock disabled, while (1) code executing from flash*5	ICLK = 1 MHz	I_{CC}	0.4	-	mA	*7
			All peripheral clock disabled, CoreMark code executing from flash*5	ICLK = 1 MHz		0.6	-		
			All peripheral clock enabled, while (1) code executing from flash*5	ICLK = 1 MHz		1.0	-		*8
			All peripheral clock enabled, code executing from SRAM*5	ICLK = 1 MHz		-	2.2		
		Sleep mode	All peripheral clock disabled*5	ICLK = 1 MHz		0.3	-		*7
			All peripheral clock enabled*5	ICLK = 1 MHz		0.9	-		*8
	Low-voltage mode*3	Normal mode	All peripheral clock disabled, while (1) code executing from flash*5	ICLK = 4 MHz	I_{CC}	1.7	-	mA	*7
			All peripheral clock disabled, CoreMark code executing from flash*5	ICLK = 4 MHz		2.8	-		
			All peripheral clock enabled, while (1) code executing from flash*5	ICLK = 4 MHz		3.0	-		*8
			All peripheral clock enabled, code executing from SRAM*5	ICLK = 4 MHz		-	8.0		
		Sleep mode	All peripheral clock disabled*5	ICLK = 4 MHz		1.3	-		*7
			All peripheral clock enabled*5	ICLK = 4 MHz		2.5	-		*8
	Subosc-speed mode*4	Normal mode	All peripheral clock disabled, while (1) code executing from flash*5	ICLK = 32.768 kHz	I_{CC}	8.5	-	μA	*8
			All peripheral clock enabled, while (1) code executing from flash*5	ICLK = 32.768 kHz		14.9	-		
			All peripheral clock enabled, code executing from SRAM*5	ICLK = 32.768 kHz		-	83.0		
		Sleep mode	All peripheral clock disabled*5	ICLK = 32.768 kHz		5.0	-		
			All peripheral clock enabled*5	ICLK = 32.768 kHz		11.4	-		

Note 1. Supply current values do not include output charge/discharge current from all pins. The values apply when internal pull-up MOSs are in the off state.
Note 2. The clock source is HOCO.
Note 3. The clock source is MOCO.
Note 4. The clock source is the sub-clock oscillator.
Note 5. This does not include BGO operation.
Note 6. This is the increase for programming or erasure of the flash memory for data storage during program execution.
Note 7. FCLK, PCLKA, PCLKB, PCLKC, and PCLKD are set to divided by 64.
Note 8. FCLK, PCLKA, PCLKB, PCLKC, and PCLKD are the same frequency as that of ICLK.
Note 9. FCLK and PCLKB are set to divided by 2 and PCLKA, PCLKC, and PCLKD are the same frequency as that of ICLK.
Note 10. VCC = 3.3 V.

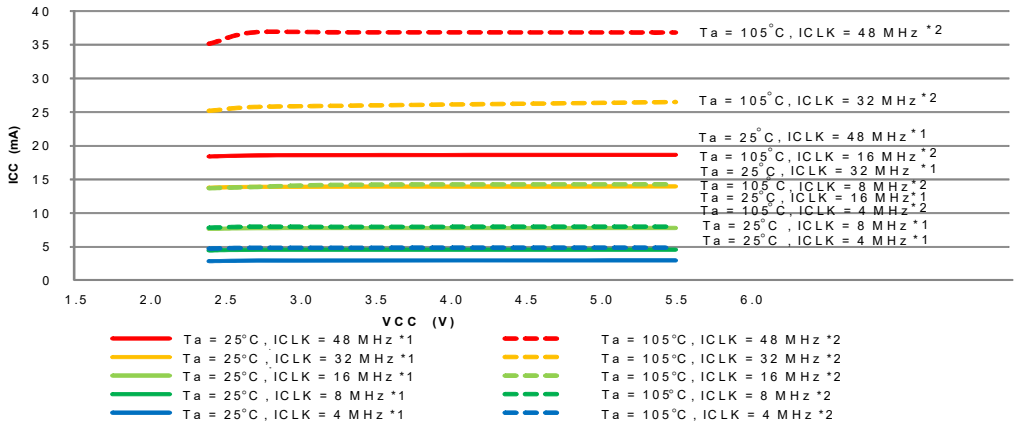

Note 1. All peripheral operations except any BGO operation are operating normally. This is the average of the actual measurements of the sample cores during product evaluation.

Note 2. All peripheral operations except any BGO operation are operating at maximum. This is the average of the actual measurements for the upper limit samples during product evaluation.

Figure 2.17 Voltage dependency in high-speed operating mode (reference data)

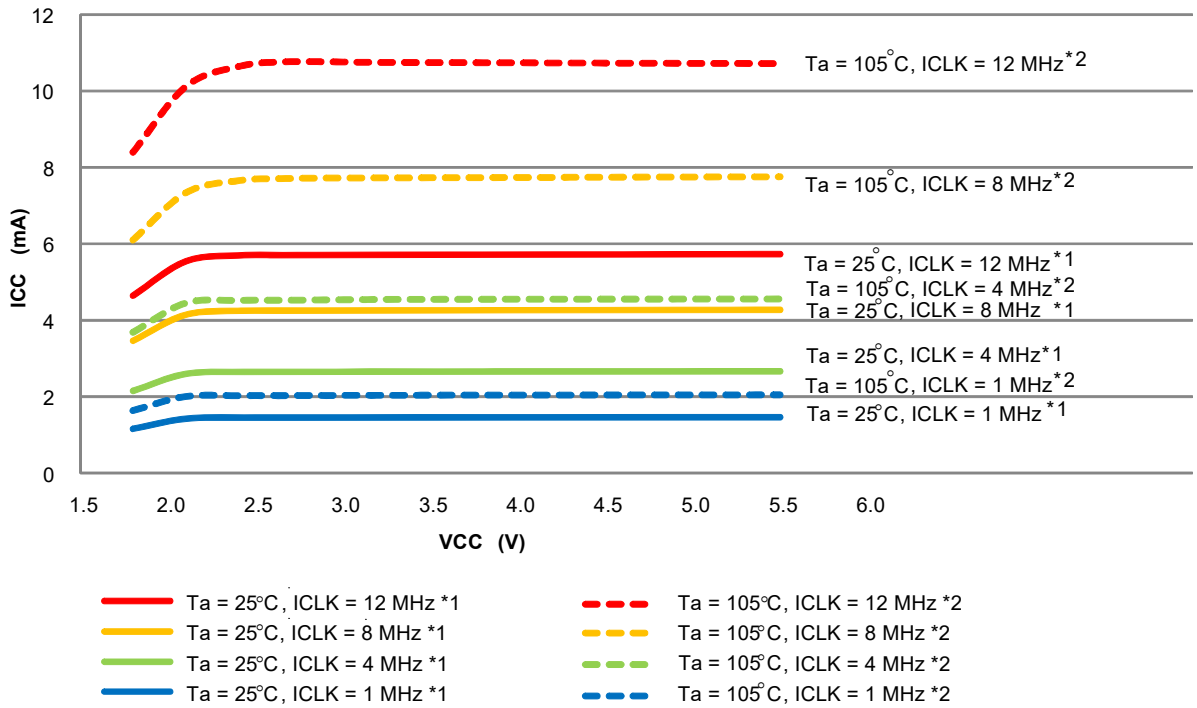

Note 1. All peripheral operations except any BGO operation are operating normally. This is the average of the actual measurements of the sample cores during product evaluation.

Note 2. All peripheral operations except any BGO operation are operating at maximum. This is the average of the actual measurements for the upper limit samples during product evaluation.

Figure 2.18 Voltage dependency in middle-speed operating mode (reference data)

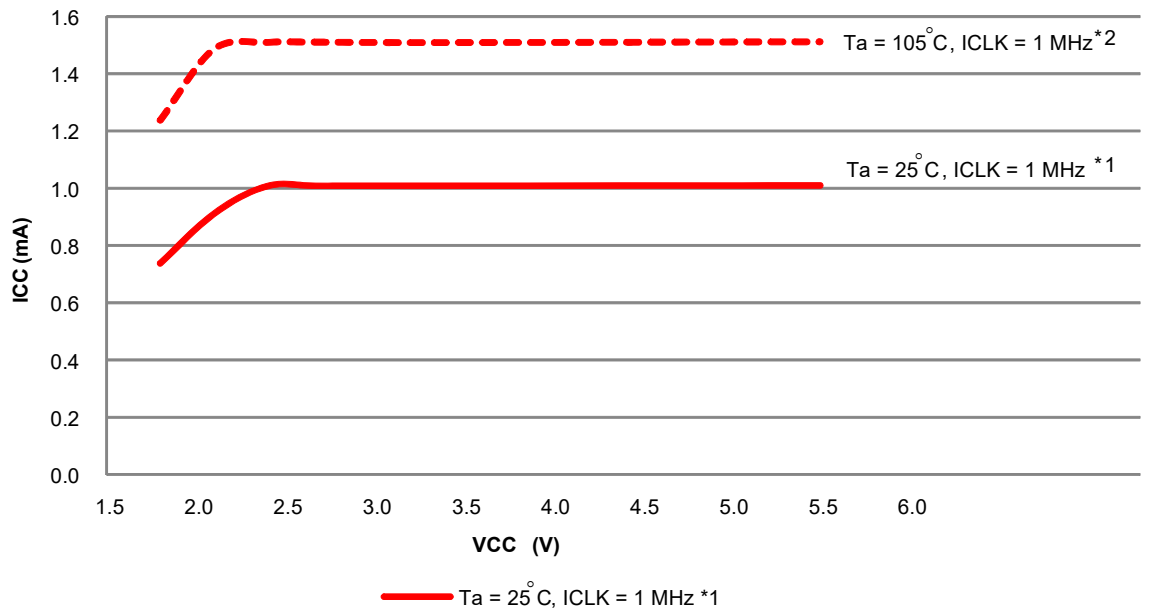

Note 1. All peripheral operations except any BGO operation are operating normally. This is the average of the actual measurements of the sample cores during product evaluation.

Note 2. All peripheral operations except any BGO operation are operating at maximum. This is the average of the actual measurements for the upper limit samples during product evaluation.

Figure 2.19 Voltage dependency in Low-speed mode (reference data)

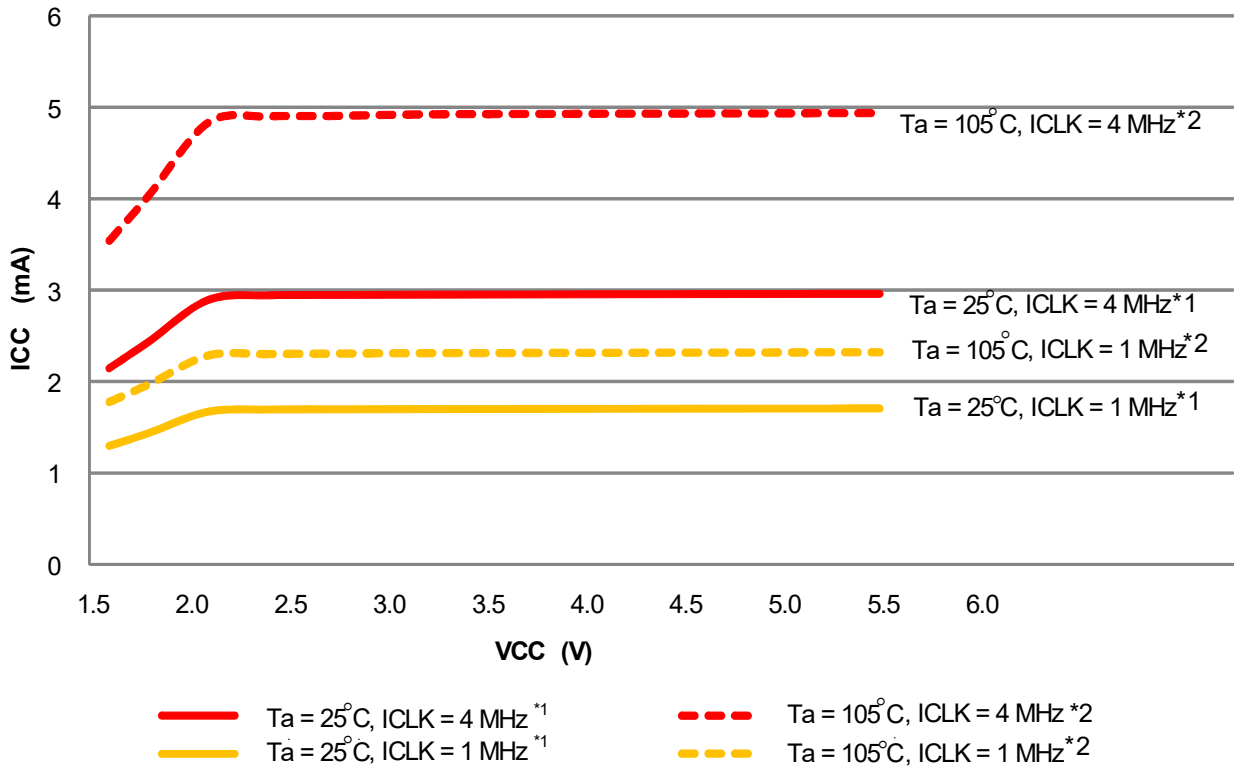

Note 1. All peripheral operations except any BGO operation are operating normally. This is the average of the actual measurements of the sample cores during product evaluation.

Note 2. All peripheral operations except any BGO operation are operating at maximum. This is the average of the actual measurements for the upper limit samples during product evaluation.

Figure 2.20 Voltage dependency in low-voltage mode (reference data)

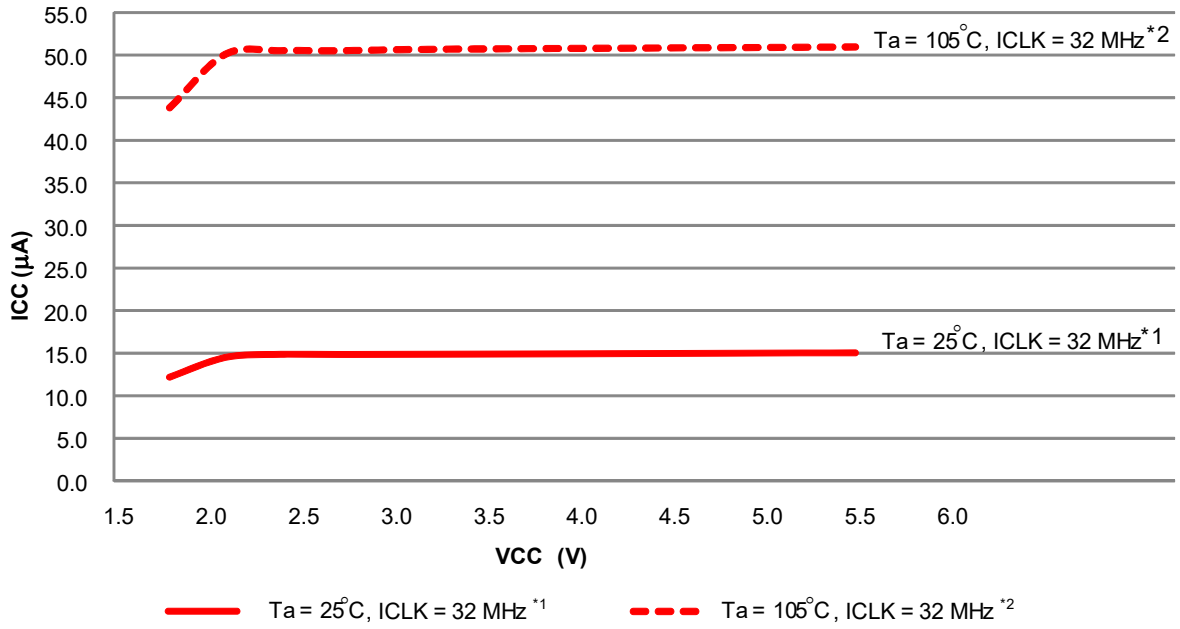

Note 1. All peripheral operations except any BGO operation are operating normally. This is the average of the actual measurements of the sample cores during product evaluation.

Note 2. All peripheral operations except any BGO operation are operating at maximum. This is the average of the actual measurements for the upper limit samples during product evaluation.

Figure 2.21 Voltage dependency in Subosc-speed mode (reference data)

Table 2.12 Operating and standby current (2)

Conditions: VCC = AVCC0 = 1.6 to 5.5 V

Parameter			Symbol	Typ*4	Max	Unit	Test conditions
Supply current*1	Software Standby mode*2	T_a = 25°C	I_{CC}	0.8	4.5	µA	-
		T_a = 55°C		1.3	7.1		
		T_a = 85°C		3.5	20.2		
		T_a = 105°C		8.7	53.7		
	Increment for RTC operation with low-speed on-chip oscillator*3			0.5	-		-
	Increment for RTC operation with sub-clock oscillator*3			0.4	-		SOMCR.SODRV[1:0] are 11b (Low power mode 3)
				1.2	-		SOMCR.SODRV[1:0] are 00b (Normal mode)

Note 1. Supply current values do not include output charge/discharge current from all pins. The values apply when internal pull-up MOSs are in the off state.

Note 2. The IWDT and LVD are not operating.

Note 3. Includes the current of sub-oscillation circuit or low-speed on-chip oscillator.

Note 4. VCC = 3.3 V.

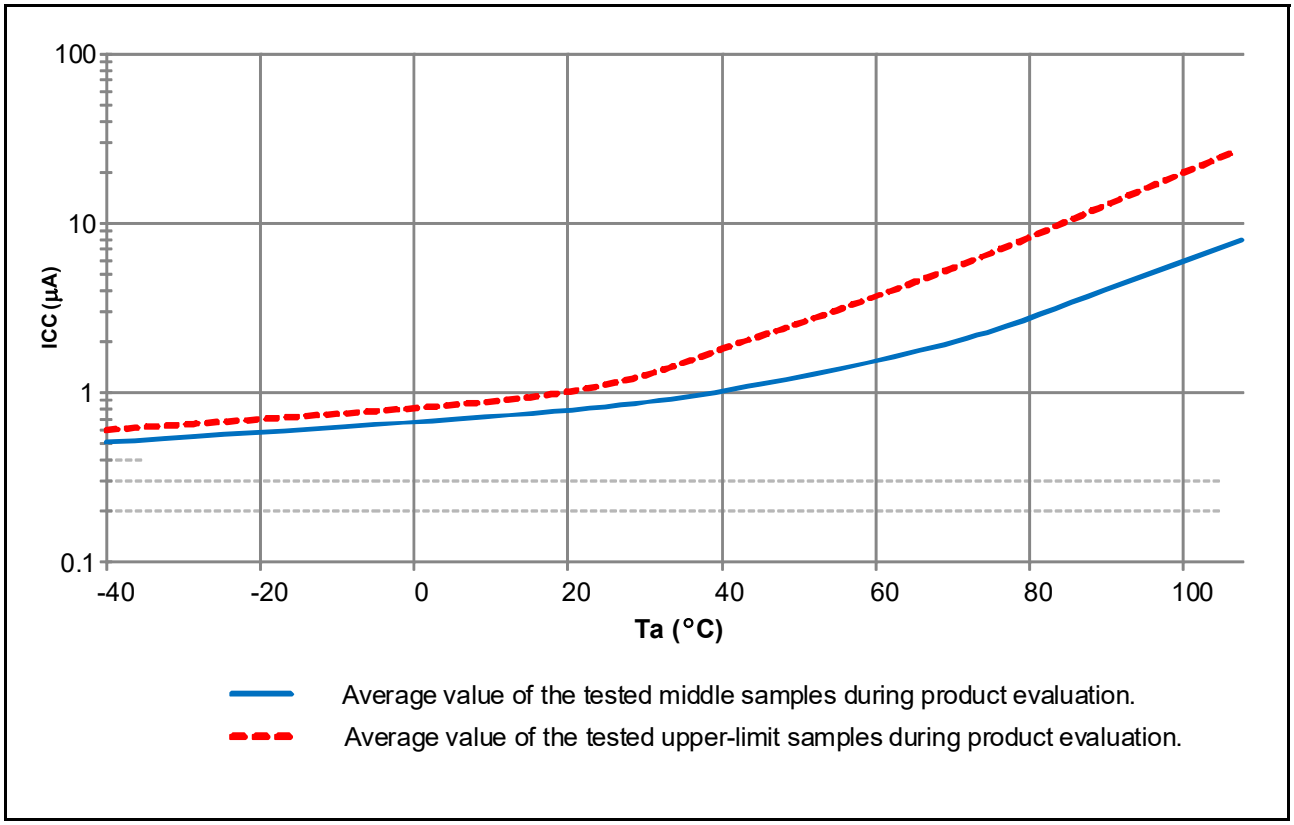

Figure 2.22 Temperature dependency in Software Standby mode all SRAM (reference data)

Table 2.13 Operating and standby current (3)

Conditions: VCC = AVCC0 = 0V, VBATT = 1.6 to 3.6 V, VSS = AVSS0 = 0V

Parameter			Symbol	Typ	Max	Unit	Test conditions
Supply current*1	RTC operation when VCC is off	T_a = 25°C	I_{CC}	0.8	-	µA	VBATT = 2.0 V SOMCR.SORDRV[1:0] = 11b (Low power mode 3)
		T_a = 55°C		0.9	-		
		T_a = 85°C		1.0	-		
		T_a = 105°C		1.1	-		
		T_a = 25°C		0.9	-		VBATT = 3.3 V SOMCR.SORDRV[1:0] = 11b (Low power mode 3)
		T_a = 55°C		1.0	-		
		T_a = 85°C		1.1	-		
		T_a = 105°C		1.2	-		
		T_a = 25°C		1.5	-		VBATT = 2.0 V SOMCR.SORDRV[1:0] = 00b (Normal mode)
		T_a = 55°C		1.7	-		
		T_a = 85°C		2.0	-		
		T_a = 105°C		2.2	-		
		T_a = 25°C		1.6	-		VBATT = 3.3 V SOMCR.SORDRV[1:0] = 00b (Normal mode)
		T_a = 55°C		1.8	-		
		T_a = 85°C		2.1	-		
		T_a = 105°C		2.3	-		

Note 1. Supply current values do not include output charge/discharge current from all pins. The values apply when internal pull-up MOSs are in the off state.

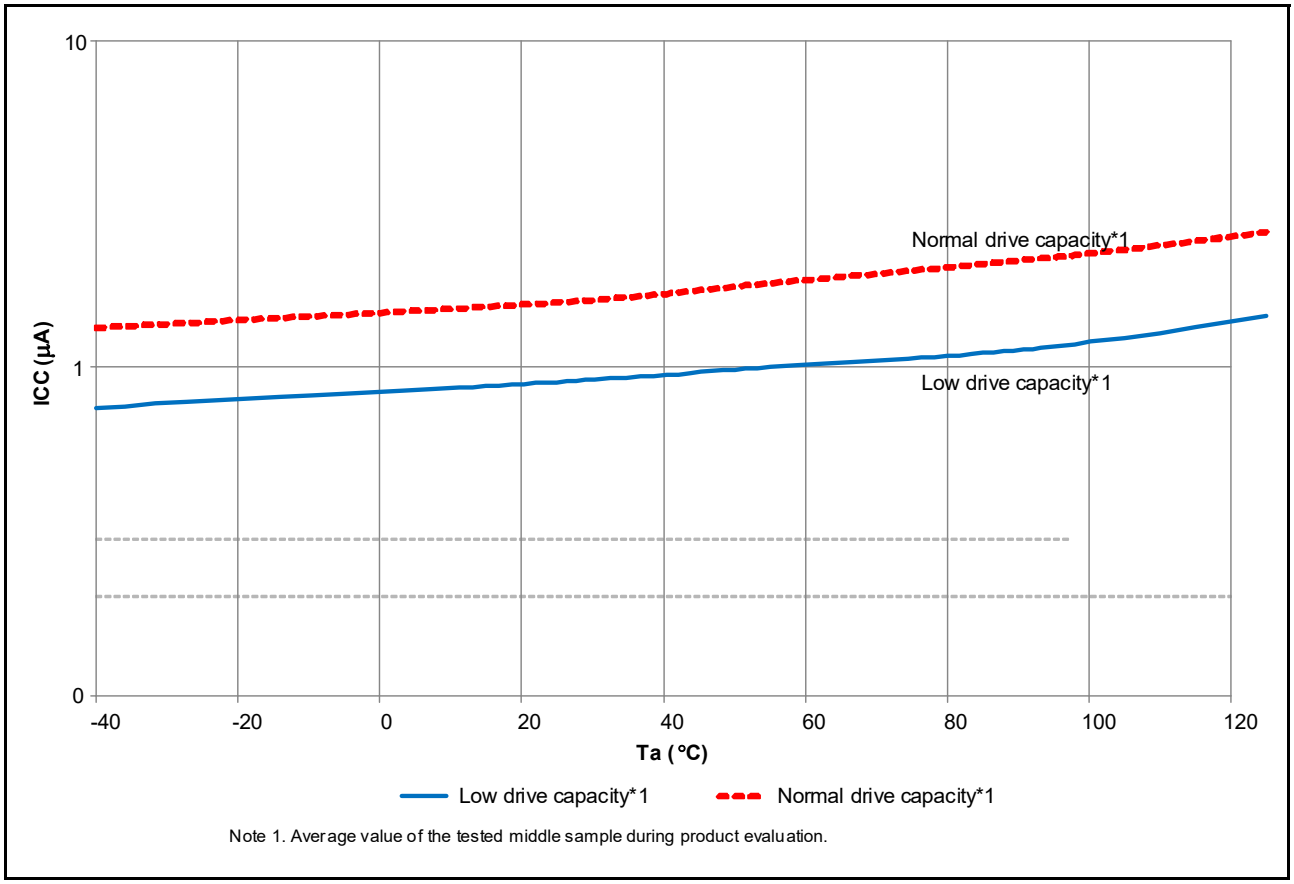

Figure 2.23 Temperature dependency of RTC operation with VCC off (reference data)

Table 2.14 Operating and standby current (4)

Conditions: VCC = AVCC0 = 1.6 to 5.5 V, VREFH0 = 2.7 V to AVCC0

Parameter			Symbol	Min	Typ	Max	Unit	Test conditions
Analog power supply current	During A/D conversion (at high-speed conversion)		I_{AVCC}	-	-	3.0	mA	-
	During A/D conversion (at low-power conversion)			-	-	1.0	mA	-
	During D/A conversion (per channel)*1			-	0.4	0.8	mA	-
	Waiting for A/D and D/A conversion (all units)*6			-	-	1.0	μA	-
Reference power supply current	During A/D conversion		I_{REFH0}	-	-	150	μA	-
	Waiting for A/D conversion (all units)			-	-	60	nA	-
	During D/A conversion		I_{REFH}	-	50	100	μA	-
	Waiting for D/A conversion (all units)			-	-	100	μA	-
Temperature sensor			I_{TNS}	-	75	-	μA	-
Low-Power Analog Comparator operating current	Window mode		I_{CMPLP}	-	15	-	μA	-
	Comparator High-speed mode			-	10	-	μA	-
	Comparator Low-speed mode			-	2	-	μA	-
	Comparator Low-speed mode using DAC8			-	820	-	μA	-
Operational Amplifier operating current	Low power mode	1 unit operating	I_{AMP}	-	2.5	4.0	μA	-
		2 units operating		-	4.5	8.0	μA	-
		3 units operating		-	6.5	11.0	μA	-
		4 units operating		-	8.5	14.0	μA	-
	High-speed mode	1 unit operating		-	140	220	μA	-
		2 units operating		-	280	410	μA	-
		3 units operating		-	420	600	μA	-
		4 units operating		-	560	780	μA	-
LCD operating current	External resistance division method $f_{LCD} = f_{SUB}$ = 128 Hz, 1/3 bias, and 4-time slice		I_{LCD1}*5	-	0.34	-	μA	-
	Internal voltage boosting method (VLCD.VLCD = 04) $f_{LCD} = f_{SUB}$ = 128 Hz, 1/3 bias, and 4-time slice		I_{LCD2}*5	-	0.92	-	μA	-
	Capacitor split method $f_{LCD} = f_{SUB}$ = 128 Hz, 1/3 bias, and 4-time slice		I_{LCD3}*5	-	0.19	-	μA	-
USB operating current	During USB communication operation under the following settings and conditions: • Host controller operation is set to full-speed mode Bulk OUT transfer (64 bytes) × 1, bulk IN transfer (64 bytes) × 1 • Connect peripheral devices via a 1-meter USB cable from the USB port.		I_{USBH}*2	-	4.3 (VCC) 0.9 (VCC_USB)*4	-	mA	-
	During USB communication operation under the following settings and conditions: • Device controller operation is set to full-speed mode Bulk OUT transfer (64 bytes) × 1, bulk IN transfer (64 bytes) × 1 • Connect the host device via a 1-meter USB cable from the USB port.		I_{USBF}*2	-	3.6 (VCC) 1.1 (VCC_USB)*4	-	mA	-
	During suspended state under the following setting and conditions: • Device controller operation is set to full-speed mode (pull up the USB_DP pin) • Software standby mode • Connect the host device via a 1-meter USB cable from the USB port.		I_{SUSP}*3	-	0.35 (VCC) 170 (VCC_USB)*4	-	μA	-

Note 1. The reference power supply current is included in the power supply current value for D/A conversion.
Note 2. Current consumed only by the USBFS.
Note 3. Includes the current supplied from the pull-up resistor of the USB_DP pin to the pull-down resistor of the host device, in addition to the current consumed by the MCU during the suspended state.
Note 4. When VCC = VCC_USB = 3.3 V.
Note 5. Current flowing only to the LCD controller. Not including the current that flows through the LCD panel.
Note 6. When the MCU is in Software Standby mode or the MSTPCRD.MSTPD16 (ADC140 module stop bit) is in the module-stop state.

2.2.10 VCC Rise and Fall Gradient and Ripple Frequency

Table 2.15 Rise and fall gradient characteristics

Conditions: VCC = AVCC0 = 0 to 5.5 V

Parameter		Symbol	Min	Typ	Max	Unit	Test conditions
Power-on VCC rising gradient	Voltage monitor 0 reset disabled at startup (normal startup)	SrVCC	0.02	-	2	ms/V	-
	Voltage monitor 0 reset enabled at startup*1		0.02	-	-		
	SCI/USB boot mode*2		0.02	-	2		

Note 1. When OFS1.LVDAS = 0.

Note 2. At boot mode, the reset from voltage monitor 0 is disabled regardless of the value of OFS1.LVDAS bit.

Table 2.16 Rising and falling gradient and ripple frequency characteristics

Conditions: VCC = AVCC0 = VCC_USB = 1.6 to 5.5 V

The ripple voltage must meet the allowable ripple frequency $f_{r(VCC)}$ within the range between the VCC upper limit (5.5 V) and lower limit (1.6 V).

When VCC change exceeds VCC ±10%, the allowable voltage change rising/falling gradient dt/dVCC must be met.

Parameter	Symbol	Min	Typ	Max	Unit	Test conditions
Allowable ripple frequency	$f_{r\ (VCC)}$	-	-	10	kHz	Figure 2.24 $V_{r\ (VCC)} \leq VCC \times 0.2$
		-	-	1	MHz	Figure 2.24 $V_{r\ (VCC)} \leq VCC \times 0.08$
		-	-	10	MHz	Figure 2.24 $V_{r\ (VCC)} \leq VCC \times 0.06$
Allowable voltage change rising and falling gradient	dt/dVCC	1.0	-	-	ms/V	When VCC change exceeds VCC ±10%

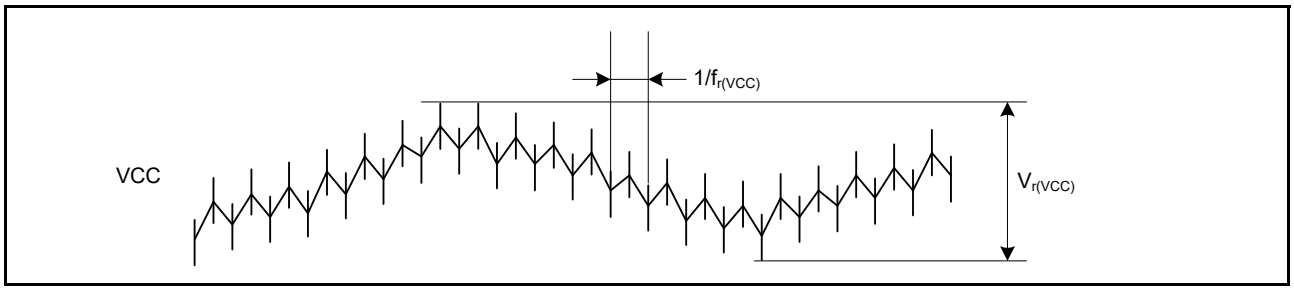

Figure 2.24 Ripple waveform

2.3 AC Characteristics

2.3.1 Frequency

Table 2.17 Operation frequency value in high-speed operating mode

Conditions: VCC = AVCC0 = 2.4 to 5.5 V

Parameter			Symbol	Min	Typ	Max*5	Unit
Operation frequency	System clock (ICLK)*4	2.7 to 5.5 V	f	0.032768	-	48	MHz
		2.4 to 2.7 V		0.032768	-	16	
	Flash interface clock (FCLK)*1, *2, *4	2.7 to 5.5 V		0.032768	-	32	
		2.4 to 2.7 V		0.032768	-	16	
	Peripheral module clock (PCLKA)*4	2.7 to 5.5 V		-	-	48	
		2.4 to 2.7 V		-	-	16	
	Peripheral module clock (PCLKB)*4	2.7 to 5.5 V		-	-	32	
		2.4 to 2.7 V		-	-	16	
	Peripheral module clock (PCLKC)*3, *4	2.7 to 5.5 V		-	-	64	
		2.4 to 2.7 V		-	-	16	
	Peripheral module clock (PCLKD)*4	2.7 to 5.5 V		-	-	64	
		2.4 to 2.7 V		-	-	16	

Note 1. The lower-limit frequency of FCLK is 1 MHz while programming or erasing the flash memory. When using FCLK for programming or erasing the flash memory at below 4 MHz, the frequency can be set to 1 MHz, 2 MHz, or 3 MHz. A non-integer frequency such as 1.5 MHz cannot be set.

Note 2. The frequency accuracy of FCLK must be ±3.5% while programming or erasing the flash memory. Confirm the frequency accuracy of the clock source.

Note 3. The lower-limit frequency of PCLKC is 4 MHz at 2.4 V or above and 1 MHz at below 2.4 V when the 14-bit A/D converter is in use.

Note 4. See section 8, Clock Generation Circuit in User's Manual for the relationship of frequencies between ICLK, PCLKA, PCLKB, PCLKC, PCLKD, and FCLK.

Note 5. The maximum value of operation frequency does not include internal oscillator errors. For details on the range of guaranteed operation, see Table 2.22, Clock timing.

Table 2.18 Operation frequency value in Middle-speed mode

Conditions: VCC = AVCC0 = 1.8 to 5.5 V

Parameter			Symbol	Min	Typ	Max*5	Unit
Operation frequency	System clock (ICLK)*4	2.7 to 5.5 V	f	0.032768	-	12	MHz
		2.4 to 2.7 V		0.032768	-	12	
		1.8 to 2.4 V		0.032768	-	8	
	Flash interface clock (FCLK)*1, *2, *4	2.7 to 5.5 V		0.032768	-	12	
		2.4 to 2.7 V		0.032768	-	12	
		1.8 to 2.4 V		0.032768	-	8	
	Peripheral module clock (PCLKA)*4	2.7 to 5.5 V		-	-	12	
		2.4 to 2.7 V		-	-	12	
		1.8 to 2.4 V		-	-	8	
	Peripheral module clock (PCLKB)*4	2.7 to 5.5 V		-	-	12	
		2.4 to 2.7 V		-	-	12	
		1.8 to 2.4 V		-	-	8	
	Peripheral module clock (PCLKC)*3, *4	2.7 to 5.5 V		-	-	12	
		2.4 to 2.7 V		-	-	12	
		1.8 to 2.4 V		-	-	8	
	Peripheral module clock (PCLKD)*4	2.7 to 5.5 V		-	-	12	
		2.4 to 2.7 V		-	-	12	
		1.8 to 2.4 V		-	-	8	

Note 1. The lower-limit frequency of FCLK is 1 MHz while programming or erasing the flash memory. When using FCLK for programming or erasing the flash memory at below 4 MHz, the frequency can be set to 1 MHz, 2 MHz, or 3 MHz. A non-integer frequency such as 1.5 MHz cannot be set.
Note 2. The frequency accuracy of FCLK must be ±3.5% while programming or erasing the flash memory. Confirm the frequency accuracy of the clock source.
Note 3. The lower-limit frequency of PCLKC is 4 MHz at 2.4 V or above and 1 MHz at below 2.4 V when the 14-bit A/D converter is in use.
Note 4. See section 8, Clock Generation Circuit in User's Manual for the relationship of frequencies between ICLK, PCLKA, PCLKB, PCLKC, PCLKD, FCLK.
Note 5. The maximum value of operation frequency does not include internal oscillator errors. For details on the range of guaranteed operation, see Table 2.22, Clock timing.

Table 2.19 Operation frequency value in Low-speed mode

Conditions: VCC = AVCC0 = 1.8 to 5.5 V

Parameter			Symbol	Min	Typ	Max*4	Unit
Operation frequency	System clock (ICLK)*3	1.8 to 5.5 V	f	0.032768	-	1	MHz
	Flash interface clock (FCLK)*1, *3	1.8 to 5.5 V		0.032768	-	1	
	Peripheral module clock (PCLKA)*3	1.8 to 5.5 V		-	-	1	
	Peripheral module clock (PCLKB)*3	1.8 to 5.5 V		-	-	1	
	Peripheral module clock (PCLKC)*2, *3	1.8 to 5.5 V		-	-	1	
	Peripheral module clock (PCLKD)*3	1.8 to 5.5 V		-	-	1	

Note 1. The lower-limit frequency of FCLK is 1 MHz while programming or erasing the flash memory.
Note 2. The lower-limit frequency of PCLKC is 1 MHz when the A/D converter is in use.
Note 3. See section 8, Clock Generation Circuit in User's Manual for the relationship of frequencies between ICLK, PCLKA, PCLKB, PCLKC, PCLKD, FCLK.
Note 4. The maximum value of operation frequency does not include internal oscillator errors. For details on the range of guaranteed operation, see Table 2.22, Clock timing.

Table 2.20 Operation frequency value in low-voltage mode

Conditions: VCC = AVCC0 = 1.6 to 5.5 V

Parameter			Symbol	Min	Typ	Max*5	Unit
Operation frequency	System clock (ICLK)*4	1.6 to 5.5 V	f	0.032768	-	4	MHz
	Flash interface clock (FCLK)*1, *2, *4	1.6 to 5.5 V		0.032768	-	4	
	Peripheral module clock (PCLKA)*4	1.6 to 5.5 V		-	-	4	
	Peripheral module clock (PCLKB)*4	1.6 to 5.5 V		-	-	4	
	Peripheral module clock (PCLKC)*3, *4	1.6 to 5.5 V		-	-	4	
	Peripheral module clock (PCLKD)*4	1.6 to 5.5 V		-	-	4	

Note 1. The lower-limit frequency of FCLK is 1 MHz while programming or erasing the flash memory. When using FCLK for programming or erasing the flash memory at below 4 MHz, the frequency can be set to 1 MHz, 2 MHz, or 3 MHz. A non-integer frequency such as 1.5 MHz cannot be set.
Note 2. The frequency accuracy of FCLK must be ±3.5% while programming or erasing the flash memory. Confirm the frequency accuracy of the clock source.
Note 3. The lower-limit frequency of PCLKC is 4 MHz at 2.4 V or above and 1 MHz at below 2.4 V when the 14-Bit A/D converter is in use.
Note 4. See section 8, Clock Generation Circuit in User's Manual for the relationship of frequencies between ICLK, PCLKA, PCLKB, PCLKC, PCLKD, FCLK.
Note 5. The maximum value of operation frequency does not include internal oscillator errors. For details on the range of guaranteed operation, see Table 2.22, Clock timing.

Table 2.21 Operation frequency value in Subosc-speed mode

Conditions: VCC = AVCC0 = 1.8 to 5.5 V

Parameter			Symbol	Min	Typ	Max	Unit
Operation frequency	System clock (ICLK)*3	1.8 to 5.5 V	f	27.8528	32.768	37.6832	kHz
	Flash interface clock (FCLK)*1, *3	1.8 to 5.5 V		27.8528	32.768	37.6832	
	Peripheral module clock (PCLKA)*3	1.8 to 5.5 V		-	-	37.6832	
	Peripheral module clock (PCLKB)*3	1.8 to 5.5 V		-	-	37.6832	
	Peripheral module clock (PCLKC)*2, *3	1.8 to 5.5 V		-	-	37.6832	
	Peripheral module clock (PCLKD)*3	1.8 to 5.5 V		-	-	37.6832	

Note 1. Programming and erasing the flash memory is not possible.
Note 2. The 14-bit A/D converter cannot be used.
Note 3. See section 8, Clock Generation Circuit in User's Manual for the relationship of frequencies between ICLK, PCLKA, PCLKB, PCLKC, PCLKD, FCLK.

2.3.2 Clock Timing

Table 2.22 Clock timing (1 of 2)

Parameter	Symbol	Min	Typ	Max	Unit	Test conditions
EXTAL external clock input cycle time	t_{Xcyc}	50	-	-	ns	Figure 2.25
EXTAL external clock input high pulse width	t_{XH}	20	-	-	ns	
EXTAL external clock input low pulse width	t_{XL}	20	-	-	ns	
EXTAL external clock rising time	t_{Xr}	-	-	5	ns	
EXTAL external clock falling time	t_{Xf}	-	-	5	ns	
EXTAL external clock input wait time*1	t_{EXWT}	0.3	-	-	μs	-
EXTAL external clock input frequency	f_{EXTAL}	-	-	20	MHz	2.4 ≤ VCC ≤ 5.5
		-	-	8		1.8 ≤ VCC < 2.4
		-	-	1		1.6 ≤ VCC < 1.8
Main clock oscillator oscillation frequency	f_{MAIN}	1	-	20	MHz	2.4 ≤ VCC ≤ 5.5
		1	-	8		1.8 ≤ VCC < 2.4
		1	-	4		1.6 ≤ VCC < 1.8
Main clock oscillation stabilization wait time (crystal)*9	$t_{MAINOSCWT}$	-	-	-*9	ms	-
LOCO clock oscillation frequency	f_{LOCO}	27.8528	32.768	37.6832	kHz	-
LOCO clock oscillation stabilization time	t_{LOCO}	-	-	100	μs	Figure 2.26
IWDT-dedicated clock oscillation frequency	f_{ILOCO}	12.75	15	17.25	kHz	-
MOCO clock oscillation frequency	f_{MOCO}	6.8	8	9.2	MHz	-
MOCO clock oscillation stabilization time	t_{MOCO}	-	-	1	μs	-

Table 2.22 Clock timing (2 of 2)

Parameter		Symbol	Min	Typ	Max	Unit	Test conditions
HOCO clock oscillation frequency		f_{HOCO24}	23.64	24	24.36	MHz	T_a = -40 to -20°C 1.8 ≤ VCC ≤ 5.5
			22.68	24	25.32		T_a = -40 to 85°C 1.6 ≤ VCC < 1.8
			23.76	24	24.24		T_a = -20 to 85°C 1.8 ≤ VCC ≤ 5.5
			23.52	24	24.48		T_a = 85 to 105°C 2.4 ≤ VCC ≤ 5.5
		f_{HOCO32}	31.52	32	32.48		T_a = -40 to -20°C 1.8 ≤ VCC ≤ 5.5
			30.24	32	33.76		T_a = -40 to 85°C 1.6 ≤ VCC < 1.8
			31.68	32	32.32		T_a = -20 to 85°C 1.8 ≤ VCC ≤ 5.5
			31.36	32	32.64		T_a = 85 to 105°C 2.4 ≤ VCC ≤ 5.5
		f_{HOCO48}*4	47.28	48	48.72		T_a = -40 to -20°C 1.8 ≤ VCC ≤ 5.5
			47.52	48	48.48		T_a = -20 to 85°C 1.8 ≤ VCC ≤ 5.5
			47.04	48	48.96		T_a = 85 to 105°C 2.4 ≤ VCC ≤ 5.5
		f_{HOCO64}*5	63.04	64	64.96		T_a = -40 to -20°C 2.4 ≤ VCC ≤ 5.5
			63.36	64	64.64		T_a = -20 to 85°C 2.4 ≤ VCC ≤ 5.5
			62.72	64	65.28		T_a = 85 to 105°C 2.4 ≤ VCC ≤ 5.5
HOCO clock oscillation stabilization time*6, *7	Except Low-Voltage mode	t_{HOCO24} t_{HOCO32}	-	-	37.1	μs	Figure 2.27
		t_{HOCO48}	-	-	43.3		
		t_{HOCO64}	-	-	80.6		
	Low-Voltage mode	t_{HOCO24} t_{HOCO32} t_{HOCO48} t_{HOCO64}	-	-	100.9		
PLL input frequency*2		f_{PLLIN}	4	-	12.5	MHz	-
PLL circuit oscillation frequency*2		f_{PLL}	24	-	64	MHz	-
PLL clock oscillation stabilization time*8		t_{PLL}	-	-	55.5	μs	Figure 2.29
PLL free-running oscillation frequency		f_{PLLFR}	-	8	-	MHz	-
Sub-clock oscillator oscillation frequency		f_{SUB}	-	32.768	-	kHz	-
Sub-clock oscillation stabilization time*3		t_{SUBOSC}	-	-	-*3	s	Figure 2.30

Note 1. Time until the clock can be used after the Main Clock Oscillator Stop bit (MOSCCR.MOSTP) is set to 0 (operating) when the external clock is stable.
Note 2. The VCC range that the PLL can be used is 2.4 to 5.5 V.
Note 3. After changing the setting of the SOSCCR.SOSTP bit so that the sub-clock oscillator operates, only start using the sub-clock after the sub-clock oscillation stabilization wait time elapses, that is greater than or equal to the value recommended by the oscillator manufacturer.
Note 4. The 48-MHz HOCO can be used within a VCC range of 1.8 V to 5.5 V.
Note 5. The 64-MHz HOCO can be used within a VCC range of 2.4 V to 5.5 V.
Note 6. This is a characteristic when HOCOCR.HCSTP bit is set to 0 (oscillation) in MOCO stop state.
When HOCOCR.HCSTP bit is set to 0 (oscillation) during MOCO oscillation, this specification is shortened by 1 μs.
Note 7. Whether stabilization time has elapsed can be confirmed by OSCSF.HOCOSF.
Note 8. This is a characteristic when PLLCR.PLLSTP bit is set to 0 (operation) in MOCO stop state.
When PLLCR.PLLSTP bit is set to 0 (operation) during MOCO oscillation, this specification is shortened by 1 μs.
Note 9. When setting up the main clock, ask the oscillator manufacturer for an oscillation evaluation and use the results as the recommended oscillation stabilization time. Set the MOSCWTCR register to a value equal to or greater than the recommended stabilization time. After changing the setting of the MOSCCR.MOSTP bit so that the main clock oscillator operates, read the OSCSF.MOSCSF flag to confirm that it is 1, then start using the main clock.

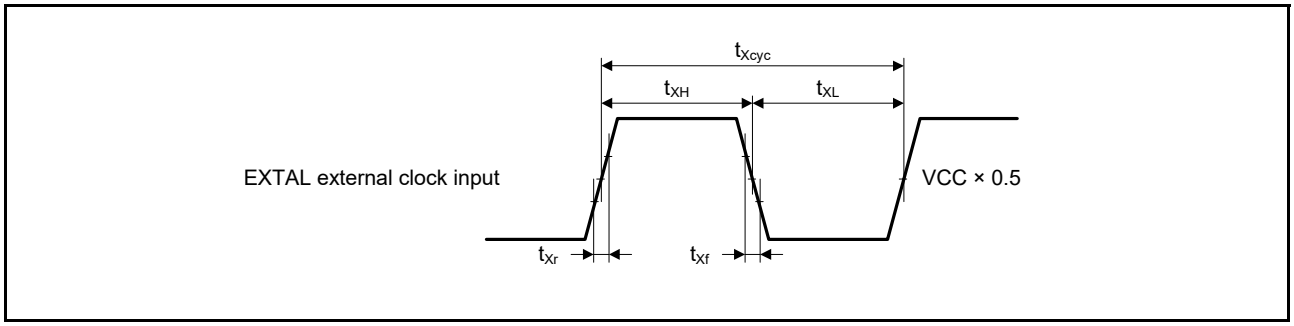

Figure 2.25 EXTAL external clock input timing

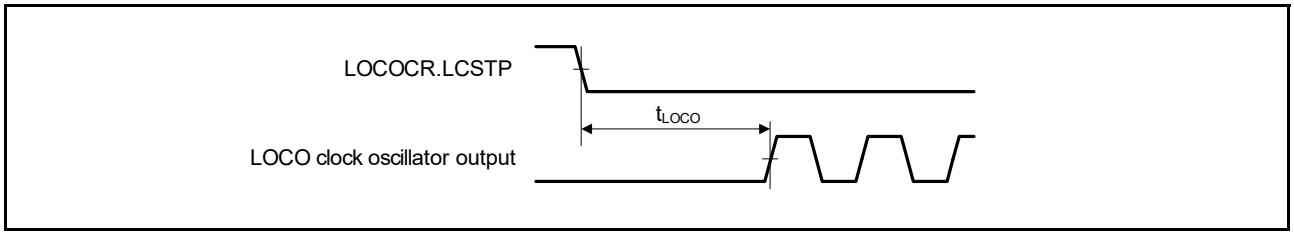

Figure 2.26 LOCO clock oscillation start timing

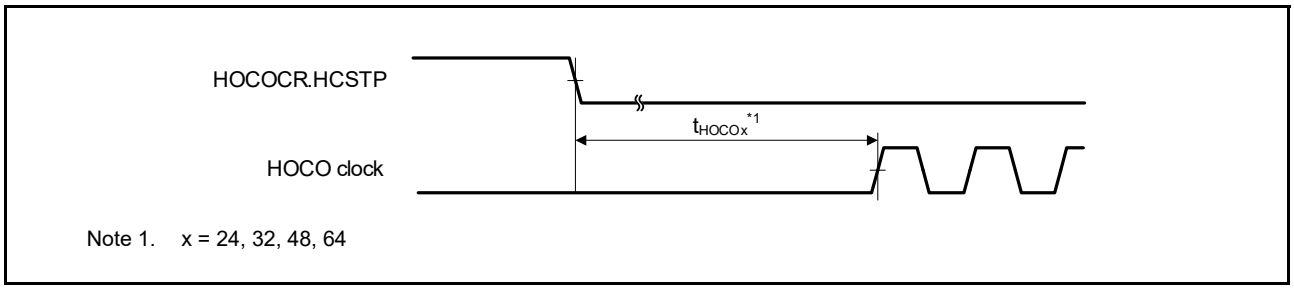

Note 1. x = 24, 32, 48, 64

Figure 2.27 HOCO clock oscillation start timing (started by setting HOCOCR.HCSTP bit)

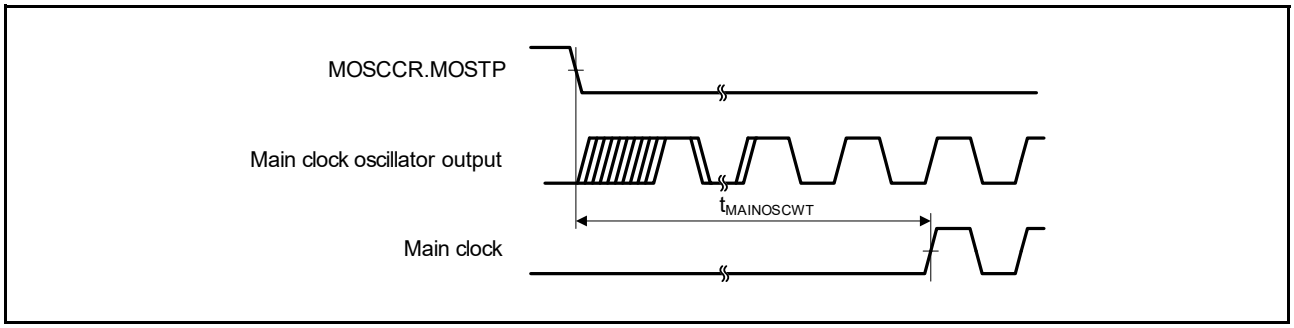

Figure 2.28 Main clock oscillation start timing

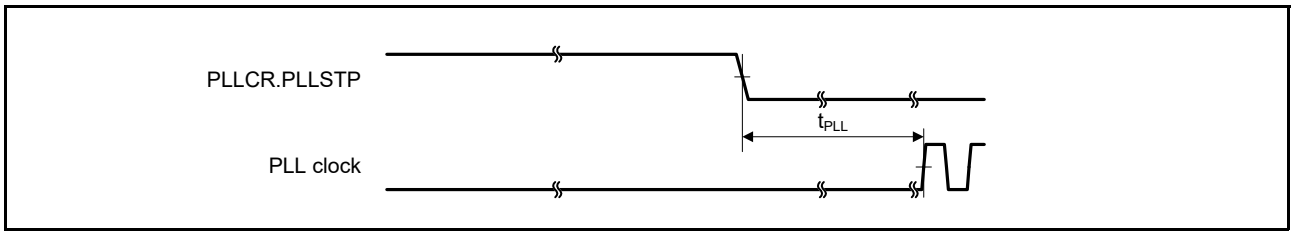

Figure 2.29 PLL clock oscillation start timing (PLL is operated after main clock oscillation has settled)

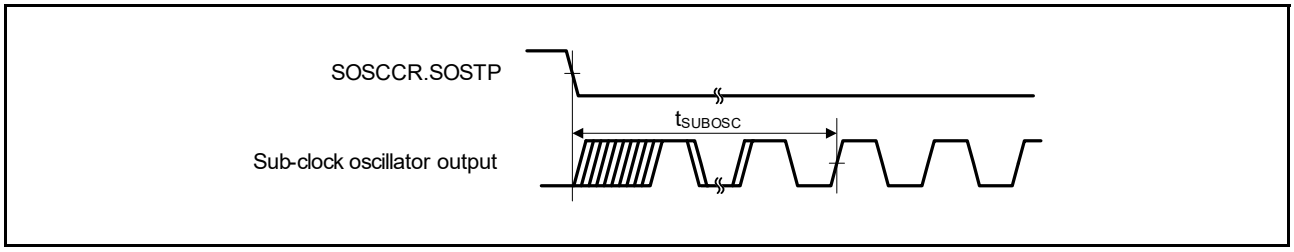

Figure 2.30 Sub-clock oscillation start timing

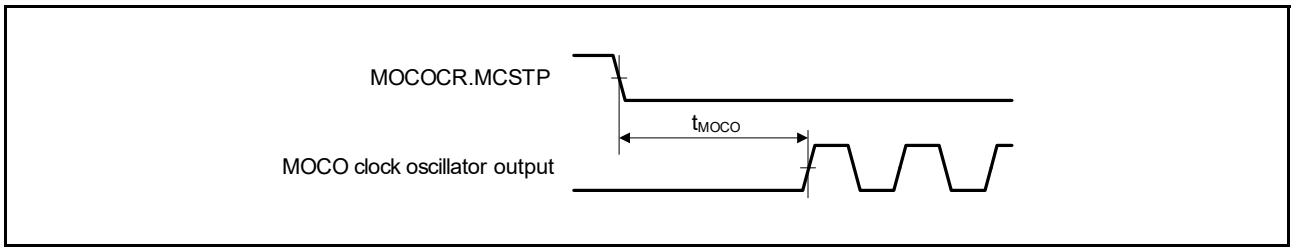

Figure 2.31 MOCO clock oscillation start timing

2.3.3 Reset Timing

Table 2.23 Reset timing

Parameter		Symbol	Min	Typ	Max	Unit	Test conditions
RES pulse width	At power-on	t_{RESWP}	3	-	-	ms	Figure 2.32
	Other than above	t_{RESW}	30	-	-	μs	Figure 2.33
Wait time after RES cancellation (at power-on)	LVD0: enable*1	t_{RESWT}	-	0.7	-	ms	Figure 2.32
	LVD0: disable*2		-	0.3	-		
Wait time after RES cancellation (during powered-on state)	LVD0: enable*1	t_{RESWT2}	-	0.5	-	ms	Figure 2.33
	LVD0: disable*2		-	0.05	-		
Internal reset cancellation time (Watchdog timer reset, SRAM parity error reset, SRAM ECC error reset, Bus master MPU error reset, Bus slave MPU error reset, Stack pointer error reset, Software reset)	LVD0: enable*1	t_{RESWT3}	-	0.6	-	ms	-
	LVD0: disable*2		-	0.15	-		

Note 1. When OFS1.LVDAS = 0.
Note 2. When OFS1.LVDAS = 1.

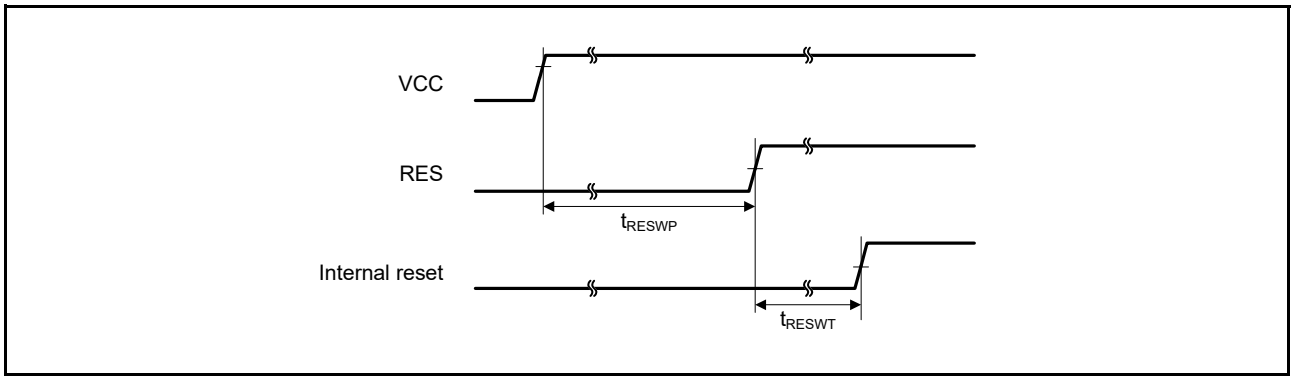

Figure 2.32 Reset input timing at power-on

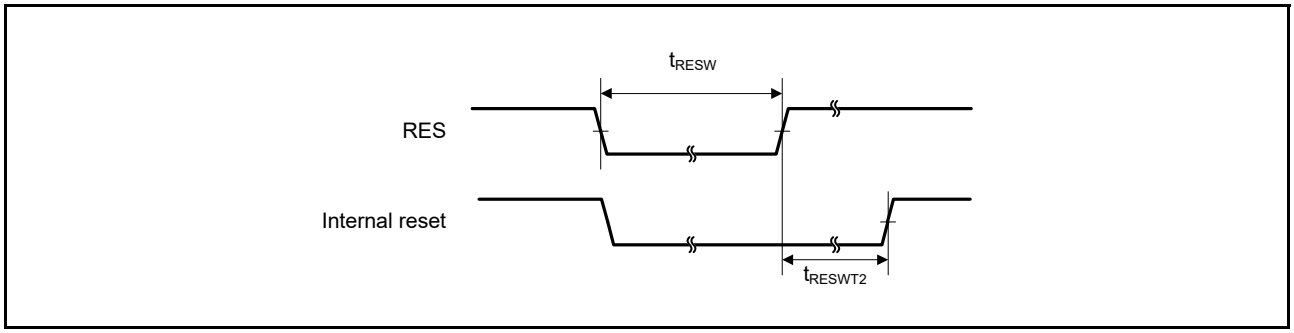

Figure 2.33 Reset input timing

2.3.4 Wakeup Time

Table 2.24 Timing of recovery from low power modes (1)

Parameter				Symbol	Min	Typ	Max	Unit	Test conditions
Recovery time from Software Standby mode*1	High-speed mode	Crystal resonator connected to main clock oscillator	System clock source is main clock oscillator (20 MHz)*2	t_{SBYMC}	-	2	3	ms	Figure 2.34
			System clock source is PLL (48 MHz) with main clock oscillator*2	t_{SBYPC}	-	2	3	ms	
		External clock input to main clock oscillator	System clock source is main clock oscillator (20 MHz)*3	t_{SBYEX}	-	14	25	μs	
			System clock source is PLL (48 MHz) with main clock oscillator*3	t_{SBYPE}	-	53	76	μs	
		System clock source is HOCO*4 (HOCO clock is 32 MHz)		t_{SBYHO}	-	43	52	μs	
		System clock source is HOCO*4 (HOCO clock is 48 MHz)		t_{SBYHO}	-	44	52	μs	
		System clock source is HOCO*5 (HOCO clock is 64 MHz)		t_{SBYHO}	-	82	110	μs	
		System clock source is MOCO		t_{SBYMO}	-	16	25	μs	

Note 1. The division ratio of ICK, FCK, and PCKx is the minimum division ratio within the allowable frequency range. The recovery time is determined by the system clock source.
Note 2. The Main Clock Oscillator Wait Control Register (MOSCWTCR) is set to 05h.
Note 3. The Main Clock Oscillator Wait Control Register (MOSCWTCR) is set to 00h.
Note 4. The HOCO Clock Wait Control Register (HOCOWTCR) is set to 05h.
Note 5. The HOCO Clock Wait Control Register (HOCOWTCR) is set to 06h.

Table 2.25 Timing of recovery from low power modes (2)

Parameter				Symbol	Min	Typ	Max	Unit	Test conditions
Recovery time from Software Standby mode*1	Middle-speed mode	Crystal resonator connected to main clock oscillator	System clock source is main clock oscillator (12 MHz)*2	t_{SBYMC}	-	2	3	ms	Figure 2.34
			System clock source is PLL (24 MHz) with main clock oscillator*2	t_{SBYPC}	-	2	3	ms	
		External clock input to main clock oscillator	System clock source is main clock oscillator (12 MHz)*3	t_{SBYEX}	-	2.9	10	μs	
			System clock source is PLL (24 MHz) with main clock oscillator*3	t_{SBYPE}	-	49	76	μs	
		System clock source is HOCO (24 MHz)		t_{SBYHO}	-	38	50	μs	
		System clock source is MOCO		t_{SBYMO}	-	3.5	5.5	μs	

Note 1. The division ratio of ICK, FCK, and PCKx is the minimum division ratio within the allowable frequency range. The recovery time is determined by the system clock source.
Note 2. The Main Clock Oscillator Wait Control Register (MOSCWTCR) is set to 05h.
Note 3. The Main Clock Oscillator Wait Control Register (MOSCWTCR) is set to 00h.

Table 2.26 Timing of recovery from low power modes (3)

Parameter				Symbol	Min	Typ	Max	Unit	Test conditions
Recovery time from Software Standby mode*1	Low-speed mode	Crystal resonator connected to main clock oscillator	System clock source is main clock oscillator (1 MHz)*2	t_{SBYMC}	-	2	3	ms	Figure 2.34
		External clock input to main clock oscillator	System clock source is main clock oscillator (1 MHz)*3	t_{SBYEX}	-	28	50	μs	
		System clock source is MOCO		t_{SBYMO}	-	25	35	μs	

Note 1. The division ratio of ICK, FCK, and PCKx is the minimum division ratio within the allowable frequency range. The recovery time is determined by the system clock source.
Note 2. The Main Clock Oscillator Wait Control Register (MOSCWTCR) is set to 05h.
Note 3. The Main Clock Oscillator Wait Control Register (MOSCWTCR) is set to 00h.

Table 2.27 Timing of recovery from low power modes (4)

Parameter				Symbol	Min	Typ	Max	Unit	Test conditions
Recovery time from Software Standby mode*1	Low-voltage mode	Crystal resonator connected to main clock oscillator	System clock source is main clock oscillator (4 MHz)*2	t_{SBYMC}	-	2	3	ms	Figure 2.34
		External clock input to main clock oscillator	System clock source is main clock oscillator (4 MHz)*3	t_{SBYEX}	-	108	130	μs	
		System clock source is HOCO		t_{SBYHO}	-	108	130	μs	

Note 1. The division ratio of ICK, FCK, and PCKx is the minimum division ratio within the allowable frequency range. The recovery time is determined by the system clock source. When multiple oscillators are active, the recovery time can be determined by the following expression.
Note 2. The Main Clock Oscillator Wait Control Register (MOSCWTCR) is set to 05h.
Note 3. The Main Clock Oscillator Wait Control Register (MOSCWTCR) is set to 00h.

Table 2.28 Timing of recovery from low power modes (5)

Parameter			Symbol	Min	Typ	Max	Unit	Test conditions
Recovery time from Software Standby mode*1	Subosc-speed mode	System clock source is sub-clock oscillator (32.768 kHz)	t_{SBYSC}	-	0.85	1	ms	Figure 2.34
		System clock source is LOCO (32.768 kHz)	t_{SBYLO}	-	0.85	1.2	ms	

Note 1. The sub-clock oscillator or LOCO itself continues to oscillate in Software Standby mode during Subosc-speed mode.

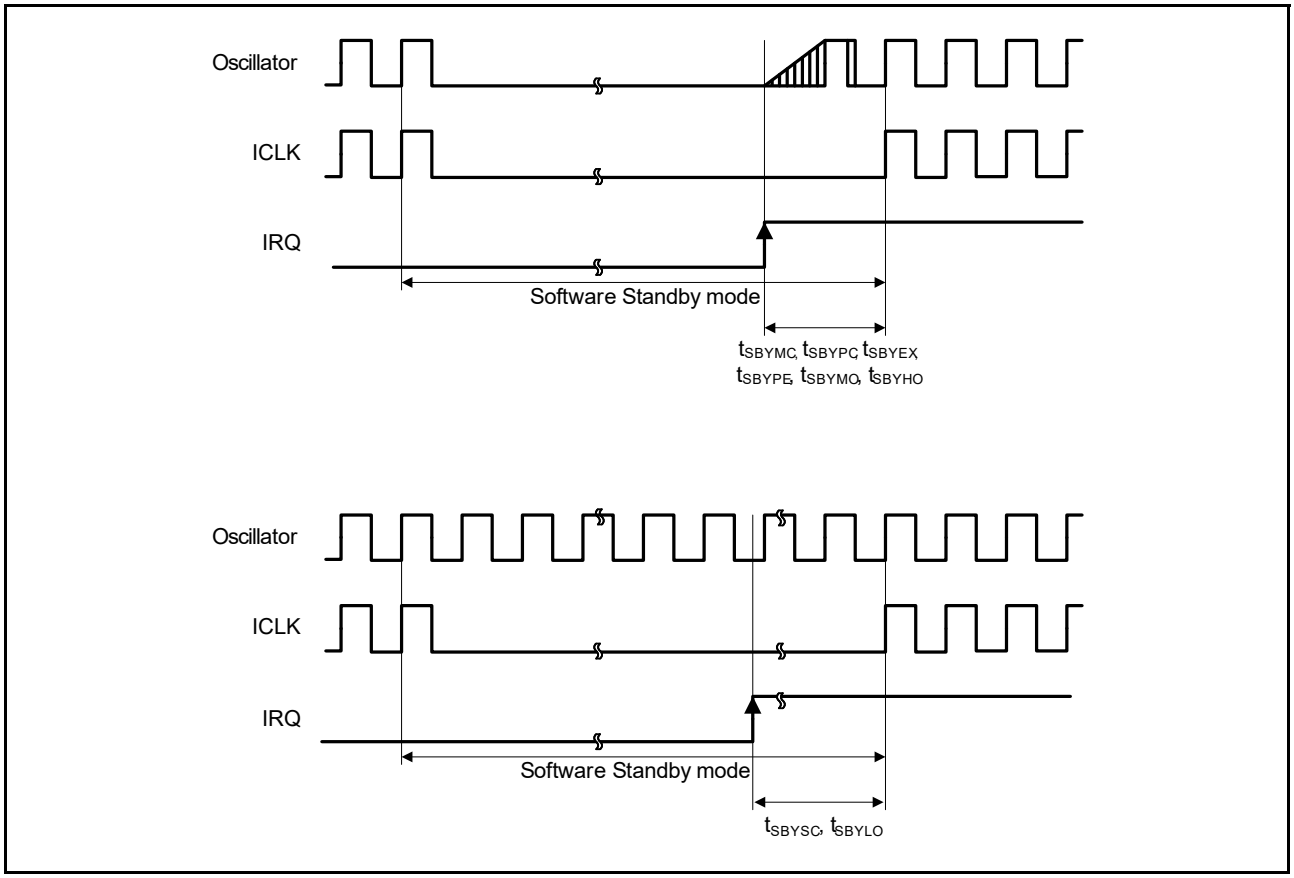

Figure 2.34 Software Standby mode cancellation timing

Table 2.29 Timing of recovery from low power modes (6)

Parameter		Symbol	Min	Typ	Max	Unit	Test conditions
Recovery time from Software Standby mode to Snooze mode	High-speed mode System clock source is HOCO	t_{SNZ}	-	36	45	μs	Figure 2.35
	Middle-speed mode System clock source is MOCO	t_{SNZ}	-	1.3	3.6	μs	
	Low-speed mode System clock source is MOCO	t_{SNZ}	-	10	13	μs	
	Low-voltage mode System clock source is HOCO	t_{SNZ}	-	87	110	μs	

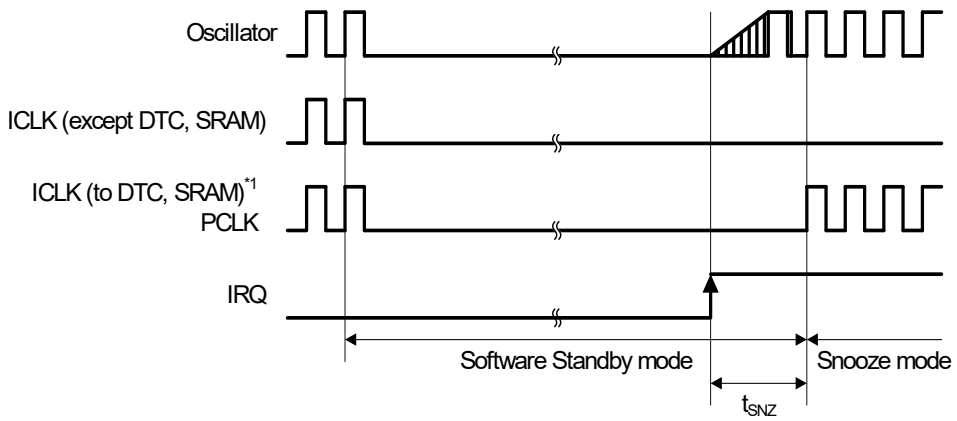

Note 1. When SNZCR.SNZDTCEN is set to 1, ICLK is supplied to DTC and SRAM.

Figure 2.35 Software Standby mode to Snooze mode recovery timing

2.3.5 NMI and IRQ Noise Filter

Table 2.30 NMI and IRQ noise filter

Parameter	Symbol	Min	Typ	Max	Unit	Test conditions	
NMI pulse width	t_{NMIW}	200	-	-	ns	NMI digital filter disabled	$t_{Pcyc} \times 2 \leq 200$ ns
		$t_{Pcyc} \times 2$*1	-	-			$t_{Pcyc} \times 2 > 200$ ns
		200	-	-		NMI digital filter enabled	$t_{NMICK} \times 3 \leq 200$ ns
		$t_{NMICK} \times 3.5$*2	-	-			$t_{NMICK} \times 3 > 200$ ns
IRQ pulse width	t_{IRQW}	200	-	-	ns	IRQ digital filter disabled	$t_{Pcyc} \times 2 \leq 200$ ns
		$t_{Pcyc} \times 2$*1	-	-			$t_{Pcyc} \times 2 > 200$ ns
		200	-	-		IRQ digital filter enabled	$t_{IRQCK} \times 3 \leq 200$ ns
		$t_{IRQCK} \times 3.5$*3	-	-			$t_{IRQCK} \times 3 > 200$ ns

Note: 200 ns minimum in Software Standby mode.
Note: If the clock source is switched, add 4 clock cycles of the switched source.
Note 1. t_{Pcyc} indicates the cycle of PCLKB.
Note 2. t_{NMICK} indicates the cycle of the NMI digital filter sampling clock.
Note 3. t_{IRQCK} indicates the cycle of the IRQi digital filter sampling clock (i = 0 to 12, 14, 15).

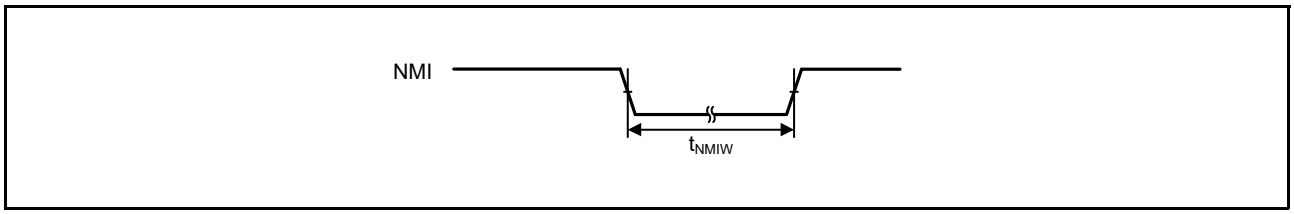

Figure 2.36 NMI interrupt input timing

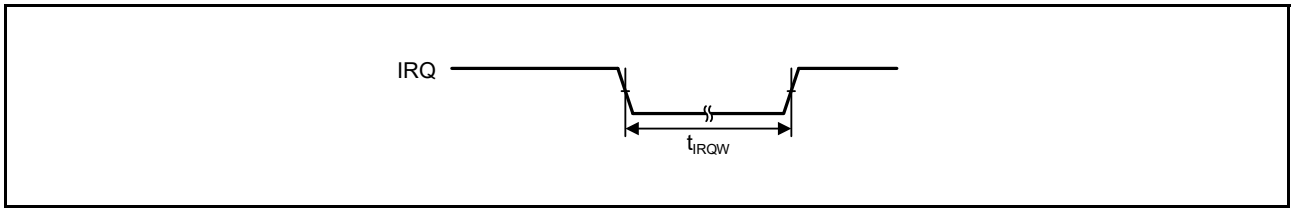

Figure 2.37 IRQ interrupt input timing

2.3.6 I/O Ports, POEG, GPT, AGT, KINT, and ADC14 Trigger Timing

Table 2.31 I/O Ports, POEG, GPT, AGT, KINT, and ADC14 trigger timing

Parameter			Symbol	Min	Max	Unit	Test conditions
I/O ports	Input data pulse width		t_{PRW}	1.5	-	t_{Pcyc}	Figure 2.38
	Input/output data cycle (P002, P003, P004, P007)		t_{POcyc}	10	-	us	
POEG	POEG input trigger pulse width		t_{POEW}	3	-	t_{Pcyc}	Figure 2.39
GPT	Input capture pulse width	Single edge	t_{GTICW}	1.5	-	t_{PDcyc}	Figure 2.40
		Dual edge		2.5	-		
AGT	AGTIO, AGTEE input cycle	2.7 V ≤ VCC ≤ 5.5 V	t_{ACYC}*1	250	-	ns	Figure 2.41
		2.4 V ≤ VCC < 2.7 V		500	-	ns	
		1.8 V ≤ VCC < 2.4 V		1000	-	ns	
		1.6 V ≤ VCC < 1.8 V		2000	-	ns	
	AGTIO, AGTEE input high level width, low-level width	2.7 V ≤ VCC ≤ 5.5 V	t_{ACKWH}, t_{ACKWL}	100	-	ns	
		2.4 V ≤ VCC < 2.7 V		200	-	ns	
		1.8 V ≤ VCC < 2.4 V		400	-	ns	
		1.6 V ≤ VCC < 1.8 V		800	-	ns	
	AGTIO, AGTO, AGTOA, AGTOB output cycle	2.7 V ≤ VCC ≤ 5.5 V	t_{ACYC2}	62.5	-	ns	Figure 2.41
		2.4 V ≤ VCC < 2.7 V		125	-	ns	
		1.8 V ≤ VCC < 2.4 V		250	-	ns	
		1.6 V ≤ VCC < 1.8 V		500	-	ns	
ADC14	14-bit A/D converter trigger input pulse width		t_{TRGW}	1.5	-	t_{Pcyc}	Figure 2.42
KINT	KRn (n = 00 to 07) pulse width		t_{KR}	250	-	ns	Figure 2.43

Note 1. Constraints on input cycle:
When not switching the source clock: $t_{Pcyc} \times 2 < t_{ACYC}$ should be satisfied.
When switching the source clock: $t_{Pcyc} \times 6 < t_{ACYC}$ should be satisfied.

Note: t_{Pcyc}: PCLKB cycle, t_{PDcyc}: PCLKD cycle

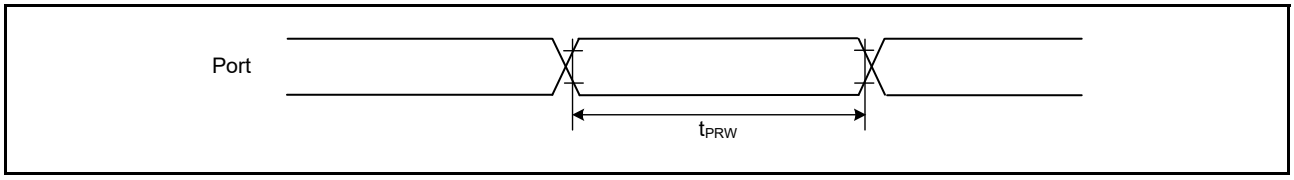

Figure 2.38 I/O ports input timing

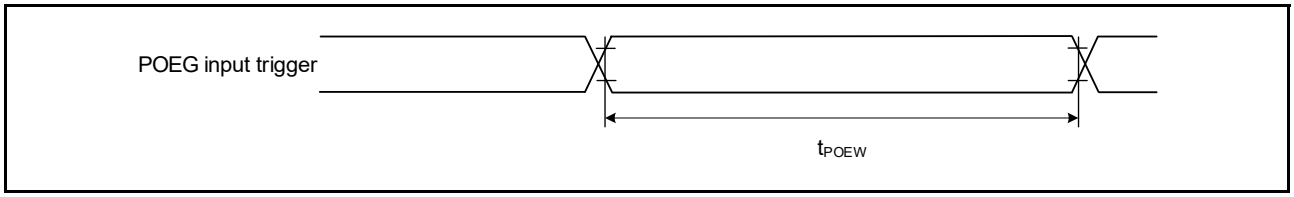

Figure 2.39 POEG input trigger timing

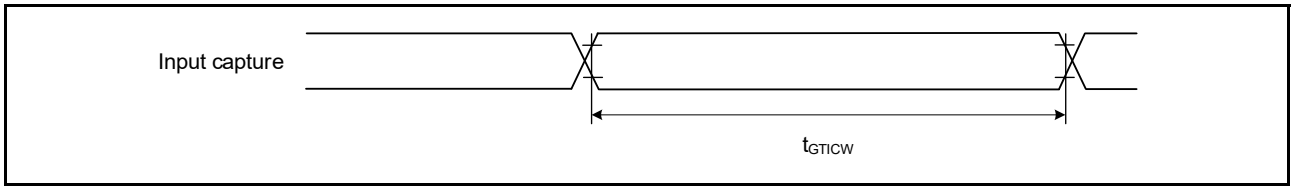

Figure 2.40 GPT input capture timing

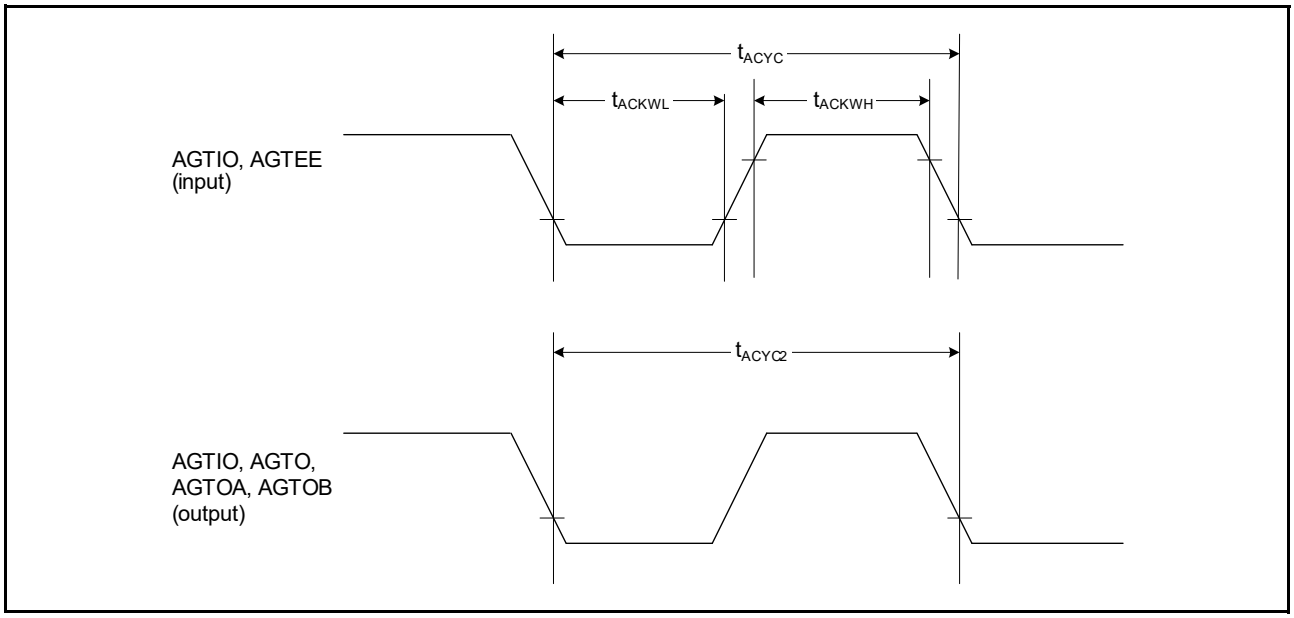

Figure 2.41 AGT I/O timing

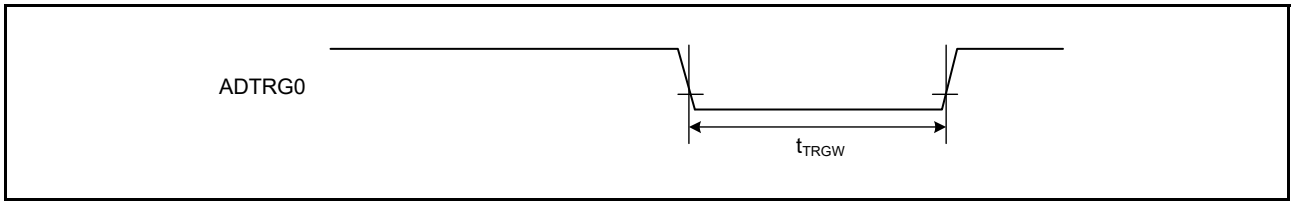

Figure 2.42 ADC14 trigger input timing

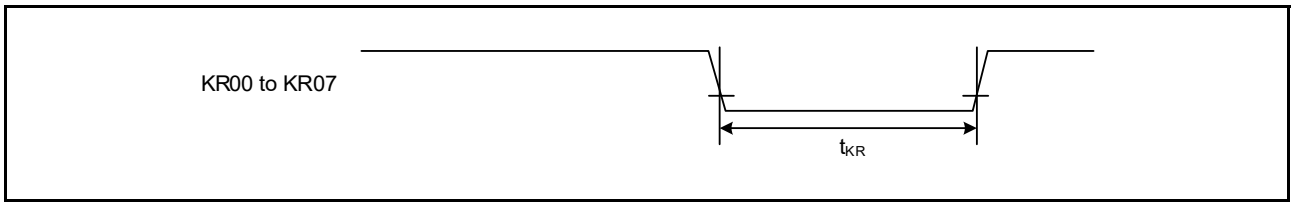

Figure 2.43 Key interrupt input timing

2.3.7 CAC Timing

Table 2.32 CAC timing

Parameter			Symbol	Min	Typ	Max	Unit	Test conditions
CAC	CACREF input pulse width	t_{PBcyc}*1 ≤ t_{cac}*2	t_{CACREF}	4.5 × t_{cac} + 3 × t_{PBcyc}*1	-	-	ns	-
		t_{PBcyc}*1 > t_{cac}*2		5 × t_{cac} + 6.5 × t_{PBcyc}*1	-	-	ns	

Note 1. t_{PBcyc}: PCLKB cycle.
Note 2. t_{cac}: CAC count clock source cycle.

2.3.8 SCI Timing

Table 2.33 SCI timing (1)

Parameter				Symbol	Min	Max	Unit*1	Test conditions
SCI	Input clock cycle	Asynchronous		t_{Scyc}	4	-	t_{Pcyc}	Figure 2.44
		Clock synchronous			6	-		
	Input clock pulse width			t_{SCKW}	0.4	0.6	t_{Scyc}	
	Input clock rise time			t_{SCKr}	-	20	ns	
	Input clock fall time			t_{SCKf}	-	20	ns	
	Output clock cycle	Asynchronous		t_{Scyc}	6	-	t_{Pcyc}	
		Clock synchronous			4	-		
	Output clock pulse width			t_{SCKW}	0.4	0.6	t_{Scyc}	
	Output clock rise time		1.8 V or above	t_{SCKr}	-	20	ns	
			1.6 V or above		-	30		
	Output clock fall time		1.8 V or above	t_{SCKf}	-	20	ns	
			1.6 V or above		-	30		
	Transmit data delay (master)	Clock synchronous	1.8 V or above	t_{TXD}	-	40	ns	Figure 2.45
			1.6 V or above		-	45		
	Transmit data delay (slave)	Clock synchronous	2.7 V or above		-	55	ns	
			2.4 V or above		-	60		
			1.8 V or above		-	100		
			1.6 V or above		-	125		
	Receive data setup time (master)	Clock synchronous	2.7 V or above	t_{RXS}	45	-	ns	
			2.4 V or above		55	-		
			1.8 V or above		90	-		
			1.6 V or above		110	-		
	Receive data setup time (slave)	Clock synchronous	2.7 V or above		40	-	ns	
			1.6 V or above		45	-		
	Receive data hold time (master)	Clock synchronous		t_{RXH}	5	-	ns	
	Receive data hold time (slave)	Clock synchronous		t_{RXH}	40	-	ns	

Note 1. t_{Pcyc}: PCLKA cycle.

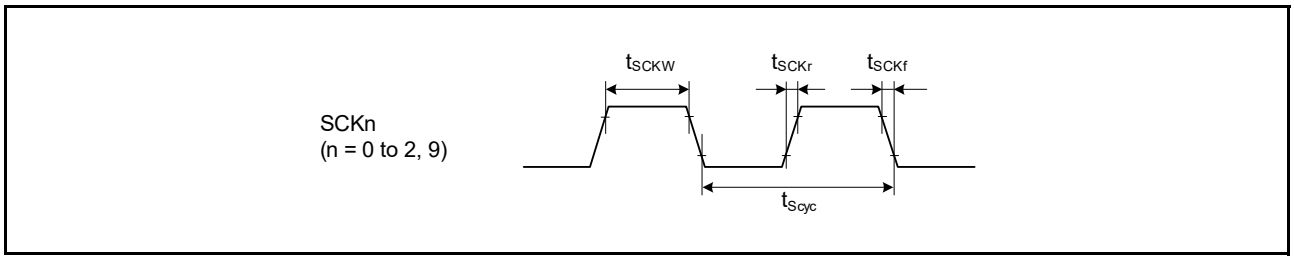

Figure 2.44 SCK clock input timing

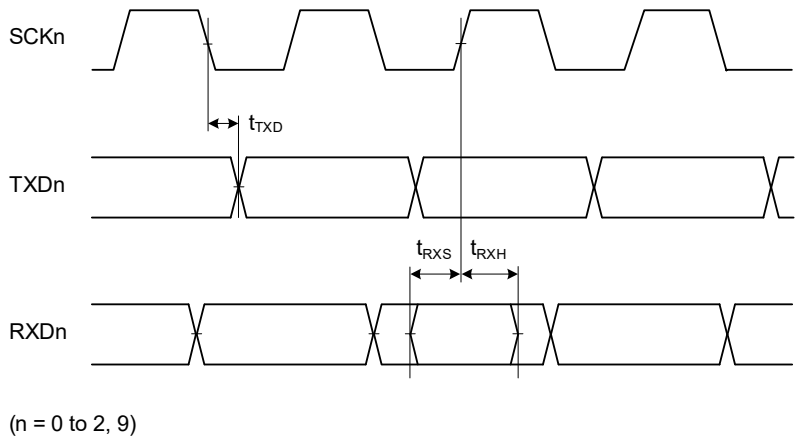

Figure 2.45 SCI input/output timing in clock synchronous mode

Table 2.34 SCI timing (2) (1 of 2)

Parameter				Symbol	Min	Max	Unit	Test conditions
Simple SPI	SCK clock cycle output (master)			t_{SPcyc}	4	65,536	t_{Pcyc}	Figure 2.46
	SCK clock cycle input (slave)				6	65,536		
	SCK clock high pulse width			t_{SPCKWH}	0.4	0.6	t_{SPcyc}	
	SCK clock low pulse width			t_{SPCKWL}	0.4	0.6	t_{SPcyc}	
	SCK clock rise and fall time		1.8 V or above	t_{SPCKr}, t_{SPCKf}	-	20	ns	
			1.6 V or above		-	30		
	Data input setup time	Master	2.7 V or above	t_{SU}	45	-	ns	Figure 2.47 to Figure 2.50
			2.4 V or above		55	-		
			1.8 V or above		80	-		
			1.6 V or above		110	-		
		Slave	2.7 V or above		40	-		
			1.6 V or above		45	-		
	Data input hold time	Master		t_H	33.3	-	ns	
		Slave			40	-		
	SS input setup time			t_{LEAD}	1	-	t_{SPcyc}	
	SS input hold time			t_{LAG}	1	-	t_{SPcyc}	
	Data output delay	Master	1.8 V or above	t_{OD}	-	40	ns	
			1.6 V or above		-	50		
		Slave	2.4 V or above		-	65		
			1.8 V or above		-	100		
			1.6 V or above		-	125		
	Data output hold time	Master	2.7 V or above	t_{OH}	-10	-	ns	
			2.4 V or above		-20	-		
			1.8 V or above		-30	-		
			1.6 V or above		-40	-		
		Slave			-10	-		
	Data rise and fall time	Master	1.8 V or above	t_{Dr}, t_{Df}	-	20	ns	
			1.6 V or above		-	30		
		Slave	1.8 V or above		-	20		
			1.6 V or above		-	30		

Table 2.34 SCI timing (2) (2 of 2)

Parameter		Symbol	Min	Max	Unit	Test conditions
Simple SPI	Slave access time	t_{SA}	-	10 (PCLKA > 32 MHz), 6 (PCLKA ≤ 32 MHz)	t_{Pcyc}	Figure 2.49 and Figure 2.50
	Slave output release time	t_{REL}	-	10 (PCLKA > 32 MHz), 6 (PCLKA ≤ 32 MHz)	t_{Pcyc}	

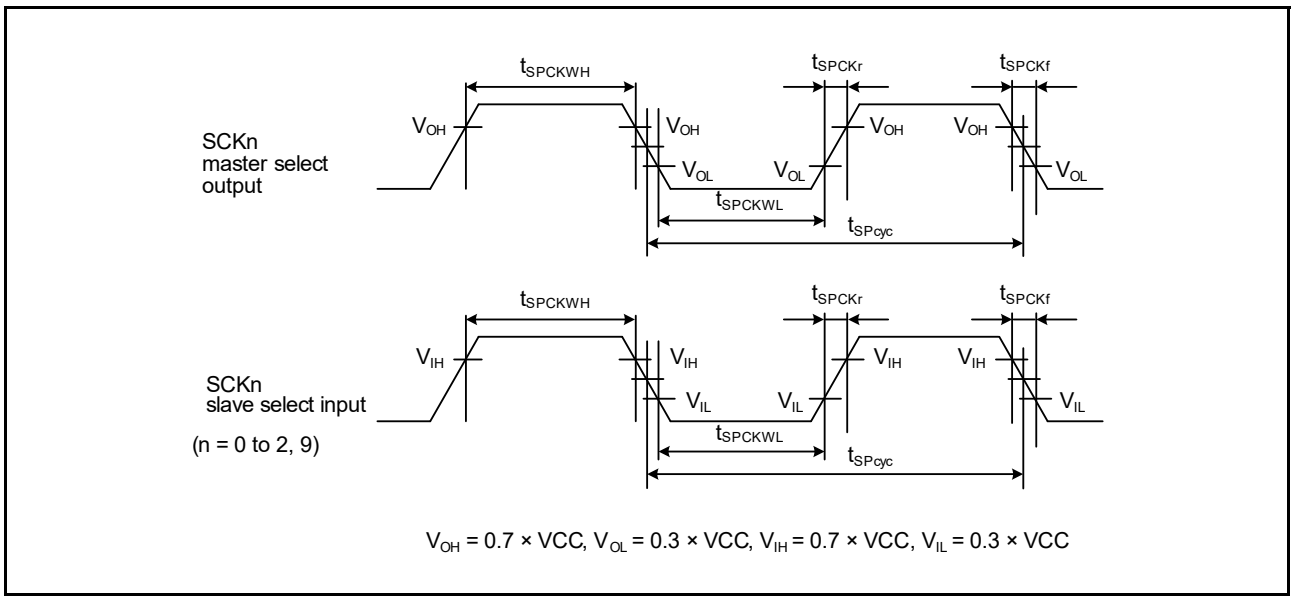

Figure 2.46 SCI simple SPI mode clock timing

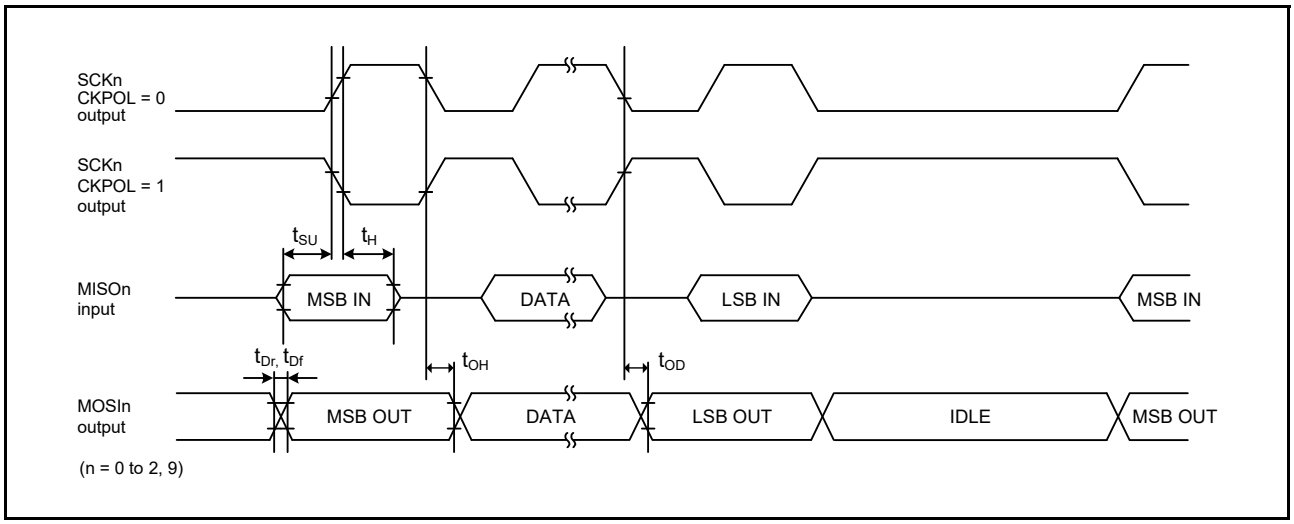

Figure 2.47 SCI simple SPI mode timing for master when CKPH = 1

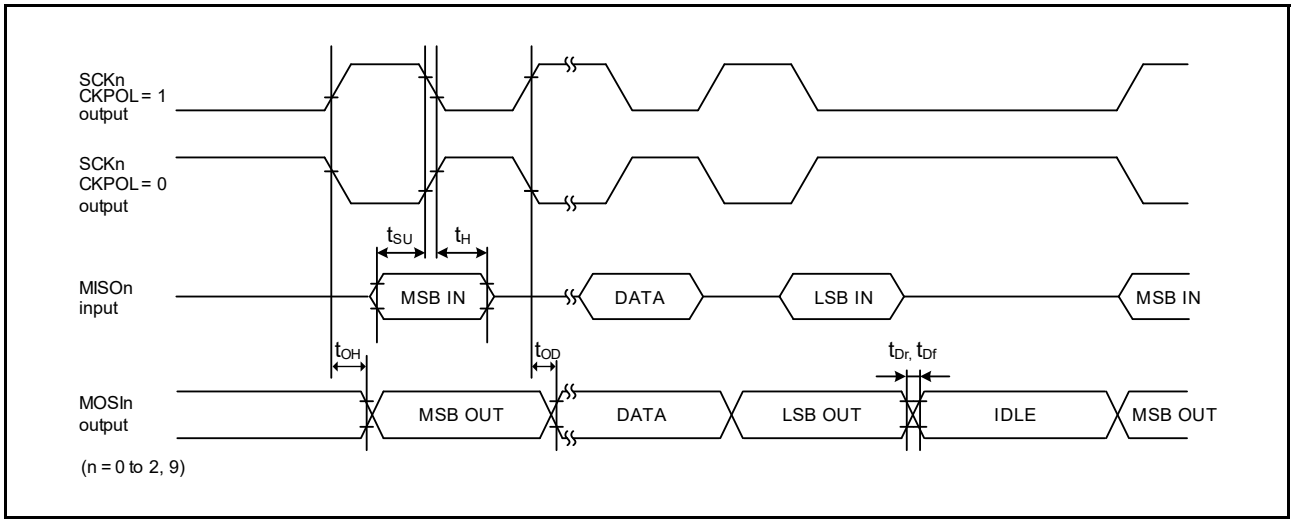

Figure 2.48 SCI simple SPI mode timing for master when CKPH = 0

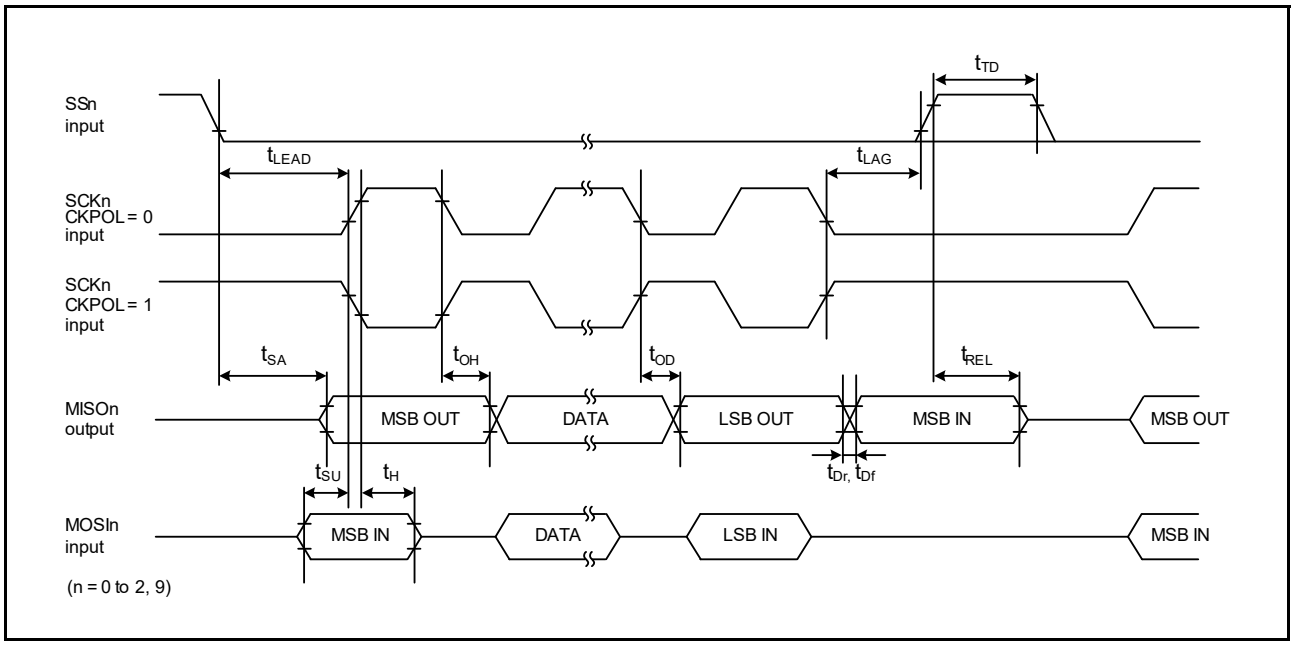

Figure 2.49 SCI simple SPI mode timing for slave when CKPH = 1

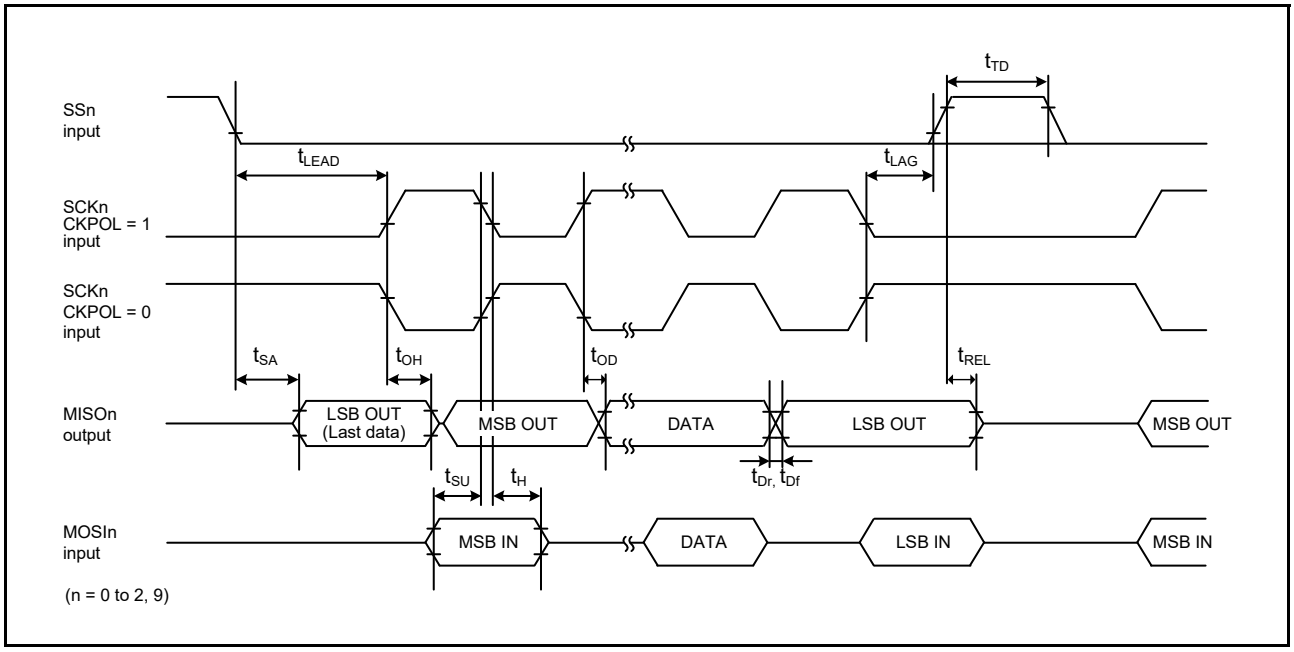

Figure 2.50 SCI simple SPI mode timing for slave when CKPH = 0

Table 2.35 SCI timing (3)

Conditions: VCC = 2.7 to 5.5 V

Parameter		Symbol	Min	Max	Unit	Test conditions
Simple I²C (Standard mode)	SDA input rise time	t_{Sr}	-	1000	ns	Figure 2.51
	SDA input fall time	t_{Sf}	-	300	ns	
	SDA input spike pulse removal time	t_{SP}	0	4 × t_{IICcyc}*1	ns	
	Data input setup time	t_{SDAS}	250	-	ns	
	Data input hold time	t_{SDAH}	0	-	ns	
	SCL, SDA capacitive load	C_b*2	-	400	pF	
Simple I²C (Fast mode)	SDA input rise time	t_{Sr}	-	300	ns	Figure 2.51 For all ports except P408, use PmnPFS.DSCR of middle drive. For port P408, use PmnPFS.DSCR1 /DSCR of middle drive for IIC fast-mode.
	SDA input fall time	t_{Sf}	-	300	ns	
	SDA input spike pulse removal time	t_{SP}	0	4 × t_{IICcyc}*1	ns	
	Data input setup time	t_{SDAS}	100	-	ns	
	Data input hold time	t_{SDAH}	0	-	ns	
	SCL, SDA capacitive load	C_b*1	-	400	pF	

Note 1. tIICcyc: Clock cycle selected by the SMR.CKS[1:0] bits.
Note 2. Cb indicates the total capacity of the bus line.

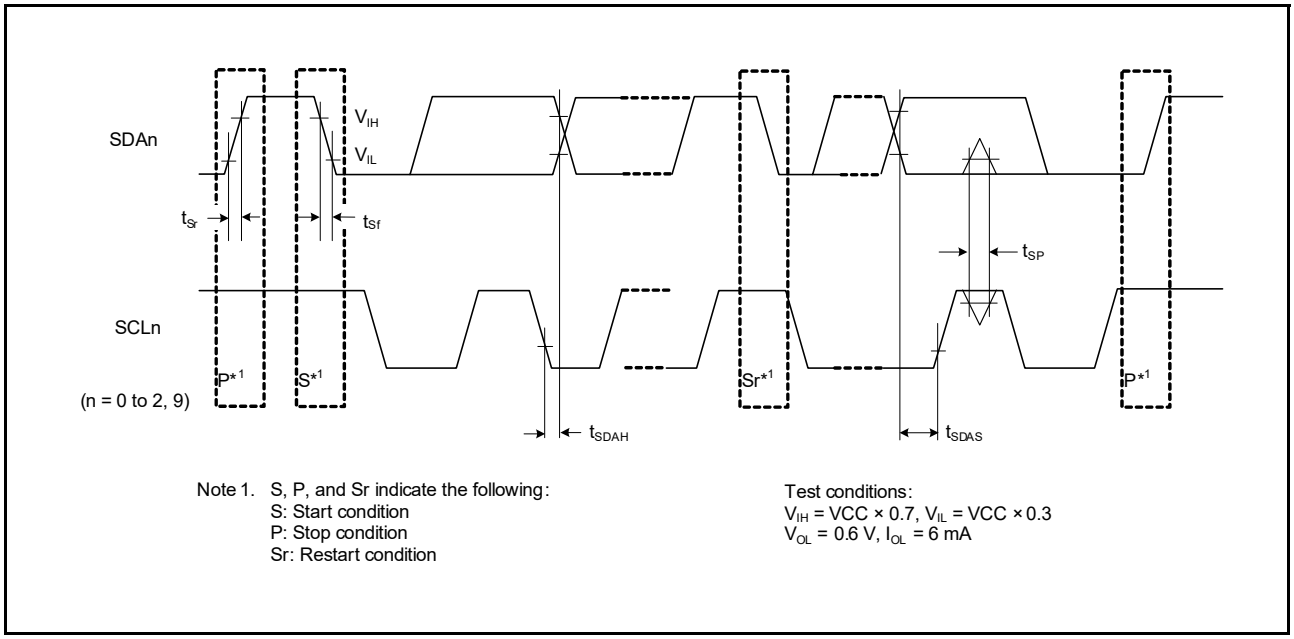

Figure 2.51 SCI simple IIC mode timing

2.3.9 SPI Timing

Table 2.36 SPI timing (1 of 2)

Conditions: Middle drive output is selected in the Port Drive Capability bit in PmnPFS register

Parameter				Symbol	Min	Max	Unit*1	Test conditions
SPI	RSPCK clock cycle	Master		t_{SPcyc}	2*4	4096	t_{Pcyc}	Figure 2.52
		Slave			6	4096		
	RSPCK clock high pulse width	Master		t_{SPCKWH}	(t_{SPcyc} - t_{SPCKr}- t_{SPCKf}) / 2 - 3	-	ns	
		Slave			3 × t_{Pcyc}	-		
	RSPCK clock low pulse width	Master		t_{SPCKWL}	(t_{SPcyc} - t_{SPCKr} - t_{SPCKf}) / 2 - 3	-	ns	
		Slave			3 × t_{Pcyc}	-		
	RSPCK clock rise and fall time	Output	2.7 V or above	t_{SPCKr}, t_{SPCKf}	-	10	ns	
			2.4 V or above		-	15		
			1.8 V or above		-	20		
			1.6 V or above		-	30		
		Input			-	1	μs	
	Data input setup time	Master		t_{SU}	10	-	ns	Figure 2.53 to Figure 2.58
		Slave	2.4 V or above		10	-		
			1.8 V or above		15	-		
			1.6 V or above		20	-		
	Data input hold time	Master (RSPCK is PCLKA/2)		t_{HF}	0	-	ns	
		Master (RSPCK is other than above.)		t_H	t_{Pcyc}	-		
		Slave		t_H	20	-		
	SSL setup time	Master	1.8 V or above	t_{LEAD}	-30 + N × t_{Spcyc}*2	-	ns	
			1.6 V or above		-50 + N × t_{Spcyc}*2	-		
		Slave			6 × t_{Pcyc}	-		
	SSL hold time	Master		t_{LAG}	-30 + N × t_{Spcyc}*3	-		
		Slave			6 × t_{Pcyc}	-		

Table 2.36 SPI timing (2 of 2)

Conditions: Middle drive output is selected in the Port Drive Capability bit in PmnPFS register

Parameter				Symbol	Min	Max	Unit*1	Test conditions
SPI	Data output delay	Master	2.7 V or above	t_{OD}	-	14	ns	Figure 2.53 to Figure 2.58
			2.4 V or above		-	20		
			1.8 V or above		-	25		
			1.6 V or above		-	30		
		Slave	2.7 V or above		-	50		
			2.4 V or above		-	60		
			1.8 V or above		-	85		
			1.6 V or above		-	110		
	Data output hold time	Master		t_{OH}	0	-	ns	
		Slave			0	-		
	Successive transmission delay	Master		t_{TD}	t_{SPcyc} + 2 × t_{Pcyc}	8 × t_{SPcyc} + 2 × t_{Pcyc}	ns	
		Slave			6 × t_{Pcyc}	-		
	MOSI and MISO rise and fall time	Output	2.7 V or above	t_{Dr}, t_{Df}	-	10	ns	
			2.4 V or above		-	15		
			1.8 V or above		-	20		
			1.6 V or above		-	30		
		Input			-	1	μs	
	SSL rise and fall time	Output	2.7 V or above	t_{SSLr}, t_{SSLf}	-	10	ns	
			2.4 V or above		-	15		
			1.8 V or above		-	20		
			1.6 V or above		-	30		
		Input			-	1	μs	
	Slave access time		2.4 V or above	t_{SA}	-	2 × t_{Pcyc} + 100	ns	Figure 2.57 and Figure 2.58
			1.8 V or above		-	2 × t_{Pcyc} + 140		
			1.6 V or above		-	2 × t_{Pcyc} + 180		
	Slave output release time		2.4 V or above	t_{REL}	-	2 × t_{Pcyc} + 100	ns	
			1.8 V or above		-	2 × t_{Pcyc} + 140		
			1.6 V or above		-	2 × t_{Pcyc} + 180		

Note 1. t_{Pcyc}: PCLKA cycle.
Note 2. N is set as an integer from 1 to 8 by the SPCKD register.
Note 3. N is set as an integer from 1 to 8 by the SSLND register.
Note 4. The upper limit of RSPCK is 16 MHz.

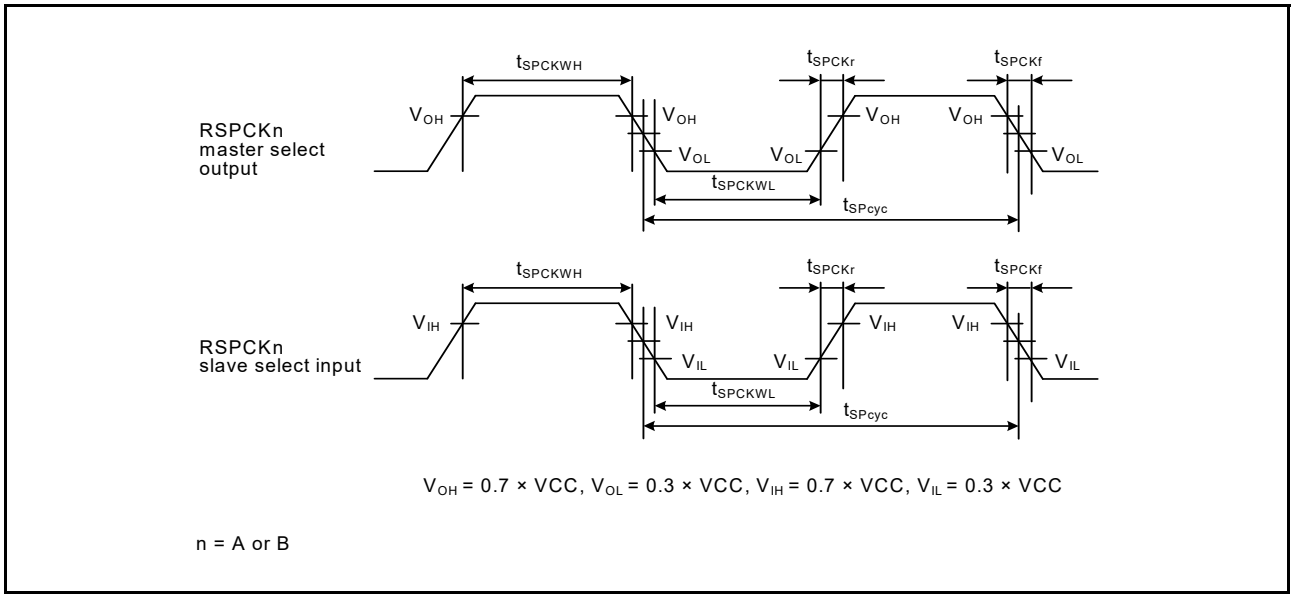

Figure 2.52 SPI clock timing

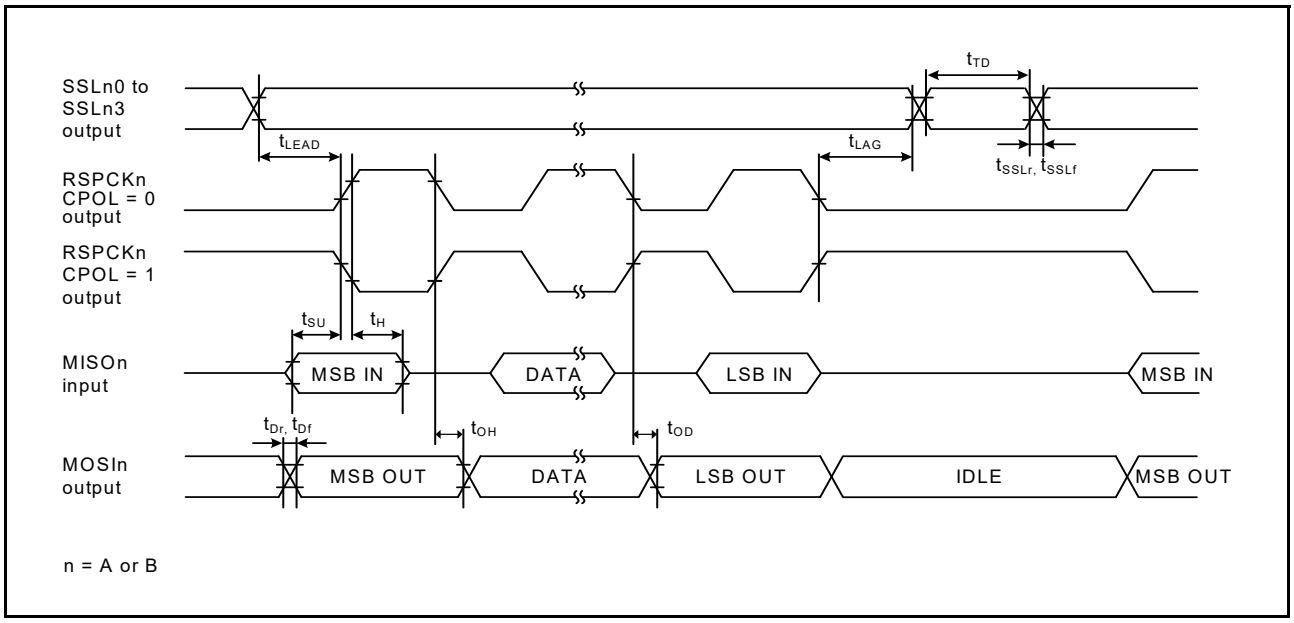

Figure 2.53 SPI timing for master when CPHA = 0 and the bit rate is set to any value other than PCLKA/2

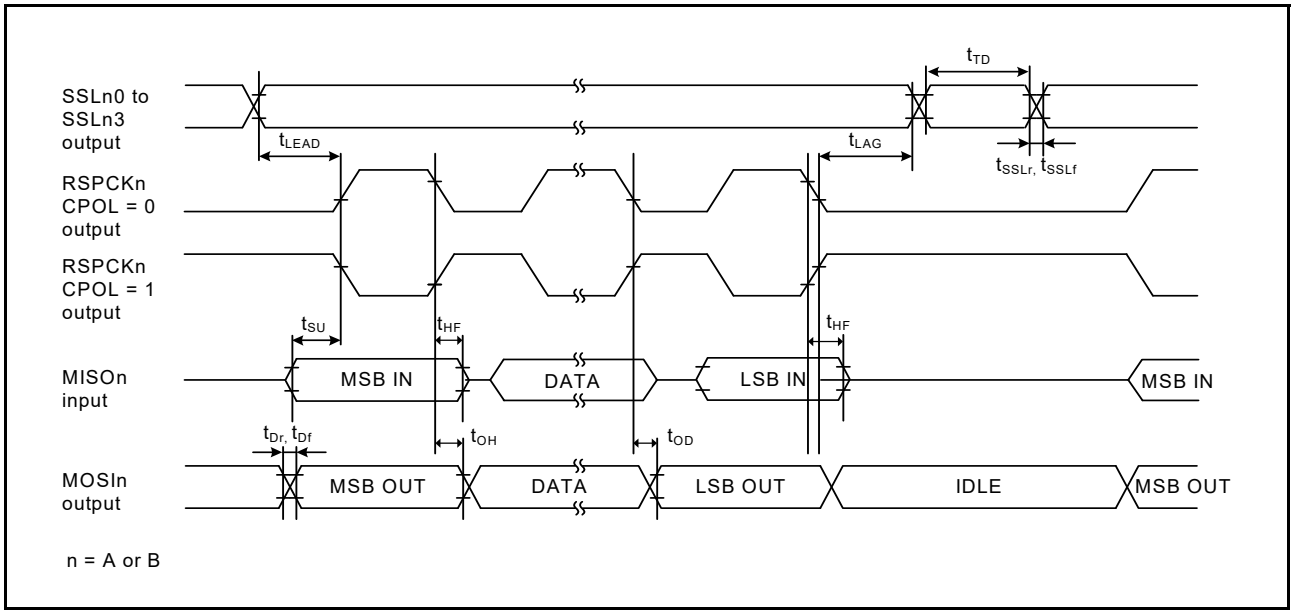

Figure 2.54 SPI timing for master when CPHA = 0 and the bit rate is set to PCLKA/2

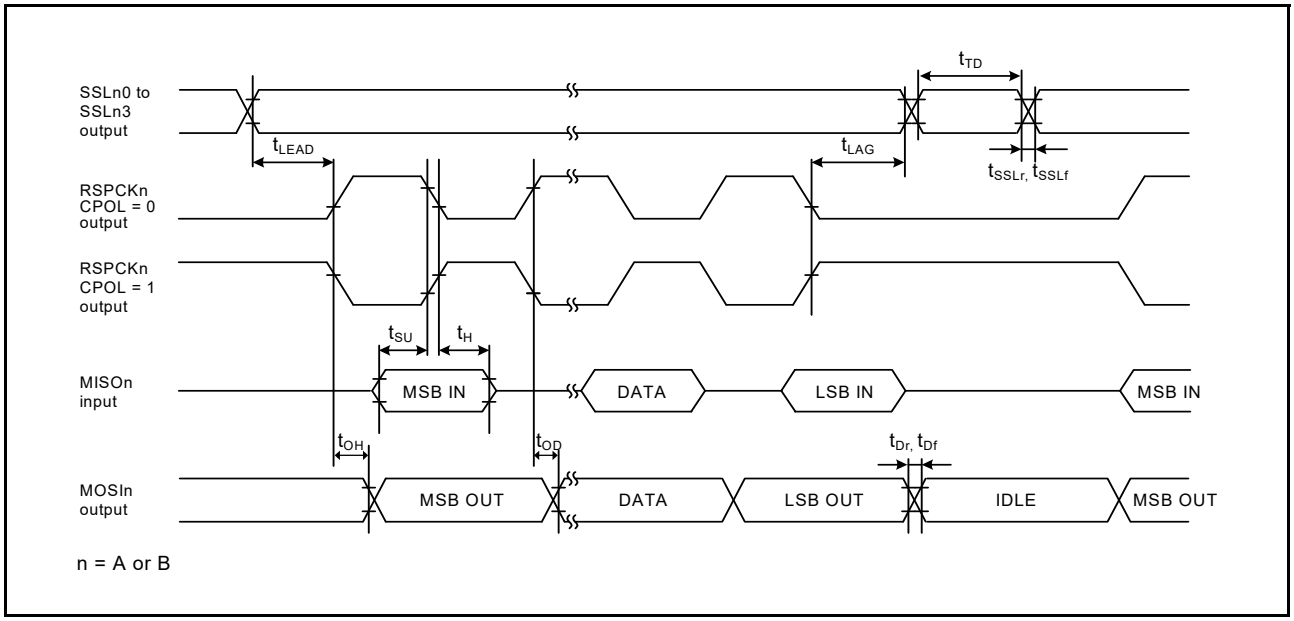

Figure 2.55 SPI timing for master when CPHA = 1 and the bit rate is set to any value other than PCLKA/2

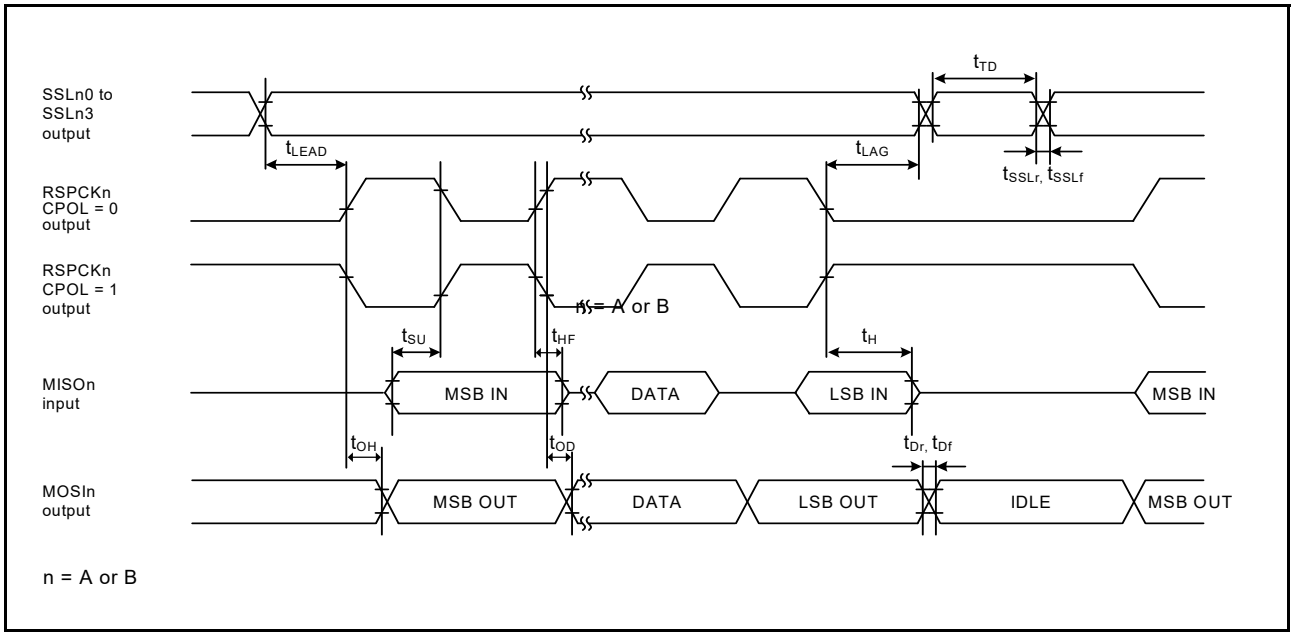

Figure 2.56 SPI timing for master when CPHA = 1 and the bit rate is set to PCLKA/2

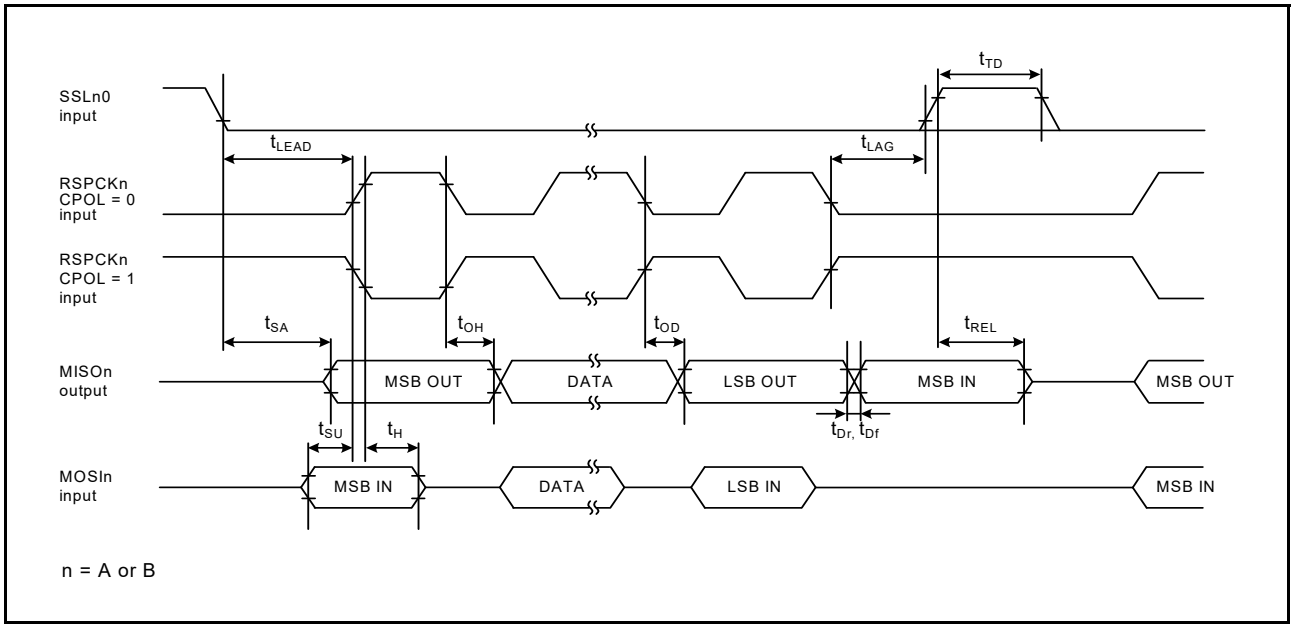

Figure 2.57 SPI timing for slave when CPHA = 0

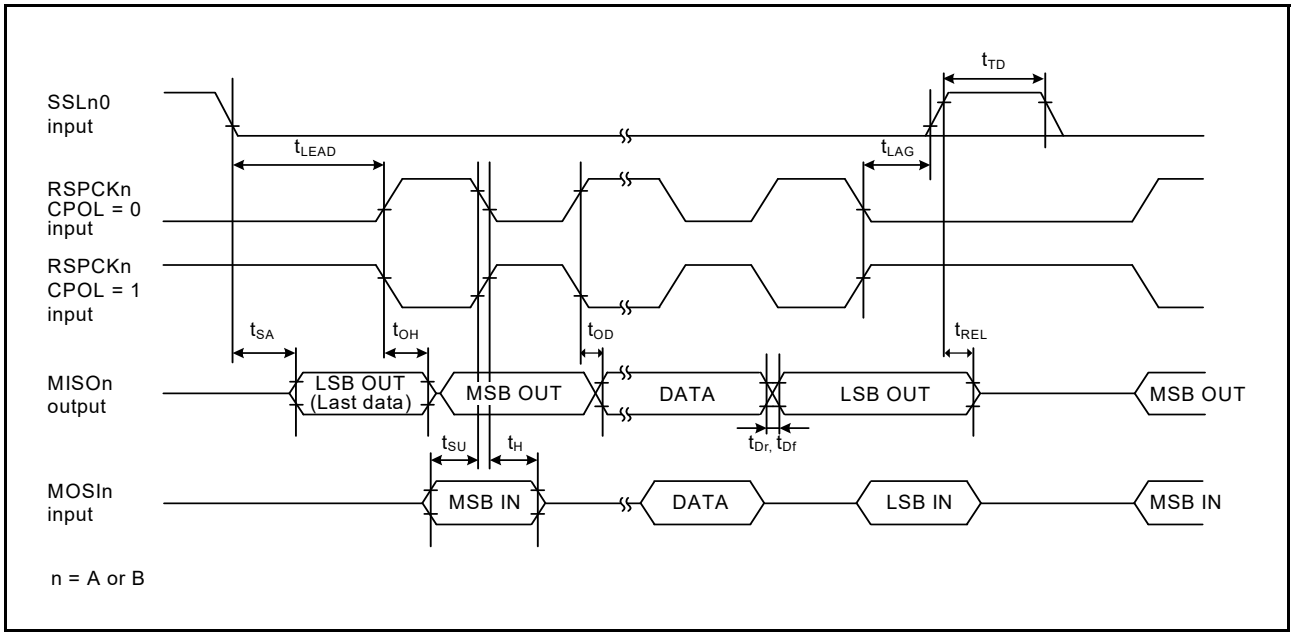

Figure 2.58 SPI timing for slave when CPHA = 1

2.3.10 IIC Timing

Table 2.37 IIC timing (1 of 2)
Conditions: VCC = 2.7 to 5.5 V

Parameter		Symbol	Min*1	Max	Unit	Test conditions
IIC (standard mode, SMBus)	SCL input cycle time	t_{SCL}	6 (12) × t_{IICcyc} + 1300	-	ns	Figure 2.59
	SCL input high pulse width	t_{SCLH}	3 (6) × t_{IICcyc} + 300	-	ns	
	SCL input low pulse width	t_{SCLL}	3 (6) × t_{IICcyc} + 300	-	ns	
	SCL, SDA input rise time	t_{Sr}	-	1,000	ns	
	SCL, SDA input fall time	t_{Sf}	-	300	ns	
	SCL, SDA input spike pulse removal time	t_{SP}	0	1 (4) × t_{IICcyc}	ns	
	SDA input bus free time (When wakeup function is disabled)	t_{BUF}	3 (6) × t_{IICcyc} + 300	-	ns	
	SDA input bus free time (When wakeup function is enabled)	t_{BUF}	3 (6) × t_{IICcyc} + 4 × t_{Pcyc} + 300	-	ns	
	START condition input hold time (When wakeup function is disabled)	t_{STAH}	t_{IICcyc} + 300	-	ns	
	START condition input hold time (When wakeup function is enabled)	t_{STAH}	1 (5) × t_{IICcyc} + t_{Pcyc} + 300	-	ns	
	Repeated START condition input setup time	t_{STAS}	1,000	-	ns	
	STOP condition input setup time	t_{STOS}	1,000	-	ns	
	Data input setup time	t_{SDAS}	t_{IICcyc} + 50	-	ns	
	Data input hold time	t_{SDAH}	0	-	ns	
	SCL, SDA capacitive load	C_b	-	400	pF	

Table 2.37 IIC timing (2 of 2)
Conditions: VCC = 2.7 to 5.5 V

Parameter		Symbol	Min*1	Max	Unit	Test conditions
IIC (Fast mode)	SCL input cycle time	t_{SCL}	6 (12) × t_{IICcyc} + 600	-	ns	Figure 2.59 For all ports except P408, use PmnPFS.DSCR of middle drive. For port P408, use PmnPFS.DSCR1/DSCR of middle drive for IIC fast-mode.
	SCL input high pulse width	t_{SCLH}	3 (6) × t_{IICcyc} + 300	-	ns	
	SCL input low pulse width	t_{SCLL}	3 (6) × t_{IICcyc} + 300	-	ns	
	SCL, SDA input rise time	t_{Sr}	-	300	ns	
	SCL, SDA input fall time	t_{Sf}	-	300	ns	
	SCL, SDA input spike pulse removal time	t_{SP}	0	1 (4) × t_{IICcyc}	ns	
	SDA input bus free time (When wakeup function is disabled)	t_{BUF}	3 (6) × t_{IICcyc} + 300	-	ns	
	SDA input bus free time (When wakeup function is enabled)	t_{BUF}	3 (6) × t_{IICcyc} + 4 × t_{Pcyc} + 300	-	ns	
	START condition input hold time (When wakeup function is disabled)	t_{STAH}	t_{IICcyc} + 300	-	ns	
	START condition input hold time (When wakeup function is enabled)	t_{STAH}	1(5) × t_{IICcyc} + t_{Pcyc} + 300	-	ns	
	Repeated START condition input setup time	t_{STAS}	300	-	ns	
	STOP condition input setup time	t_{STOS}	300	-	ns	
	Data input setup time	t_{SDAS}	t_{IICcyc} + 50	-	ns	
	Data input hold time	t_{SDAH}	0	-	ns	
	SCL, SDA capacitive load	C_b	-	400	pF	

Note: t_{IICcyc}: IIC internal reference clock (IICφ) cycle, t_{Pcyc}: PCLKB cycle
Note 1. The value in parentheses apply when ICMR3.NF[1:0] is set to 11b while the digital filter is enabled with ICFER.NFE set to 1.

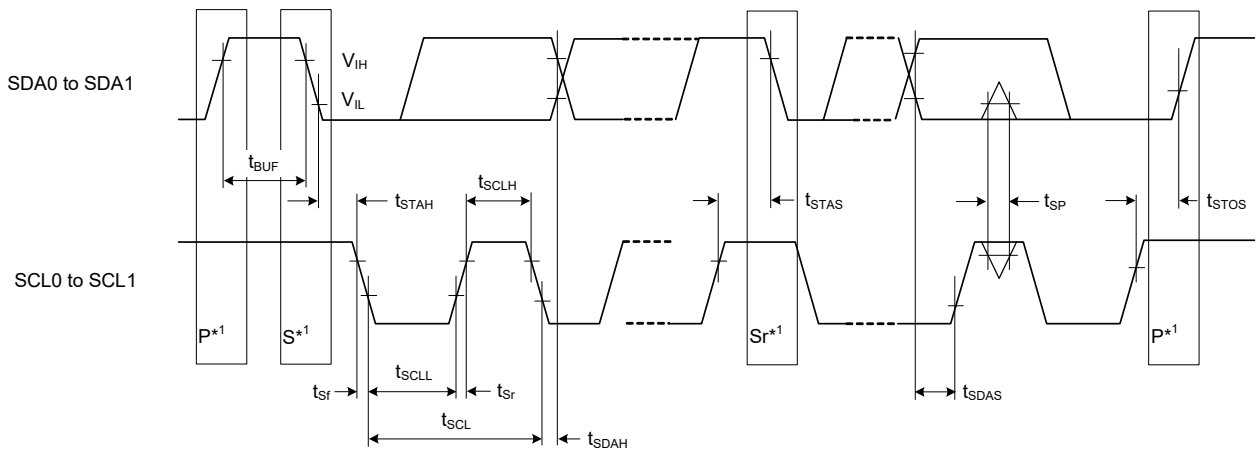

Note 1. S, P, and Sr indicate the following conditions.
S: Start condition
P: Stop condition
Sr: Restart condition.

Figure 2.59 IIC bus interface input/output timing

2.3.11 SSIE Timing

Table 2.38 SSIE timing
Conditions: VCC = 1.6 to 5.5 V

Parameter			Symbol	Min	Max	Unit	Test conditions
SSIE	AUDIO_CLK input frequency	2.7 V or above	t_{AUDIO}	-	25	MHz	-
		1.6 V or above		-	4		
	Output clock period		t_O	250	-	ns	Figure 2.60
	Input clock period		t_I	250	-	ns	
	Clock high pulse width	1.8 V or above	t_{HC}	100	-	ns	
		1.6 V or above		200	-		
	Clock low pulse width	1.8 V or above	t_{LC}	100	-	ns	
		1.6 V or above		200	-		
	Clock rise time		t_{RC}	-	25	ns	
	Data delay	2.7 V or above	t_{DTR}	-	65	ns	Figure 2.61, Figure 2.62
		1.8 V or above		-	105		
		1.6 V or above		-	140		
	Set-up time	2.7 V or above	t_{SR}	65	-	ns	
		1.8 V or above		90	-		
		1.6 V or above		140	-		
	Hold time		t_{HTR}	40	-	ns	
	SSITXD0 output delay from SSILRCK0/SSIFS0 change time	1.8 V or above	T_{DTRW}	-	105	ns	Figure 2.63
		1.6 V or above		-	140		

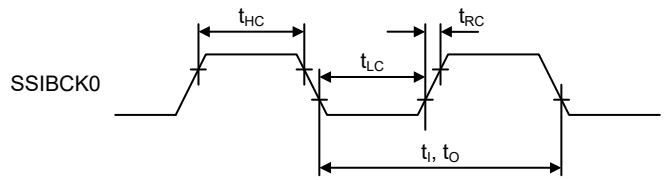

Figure 2.60 SSIE clock input/output timing

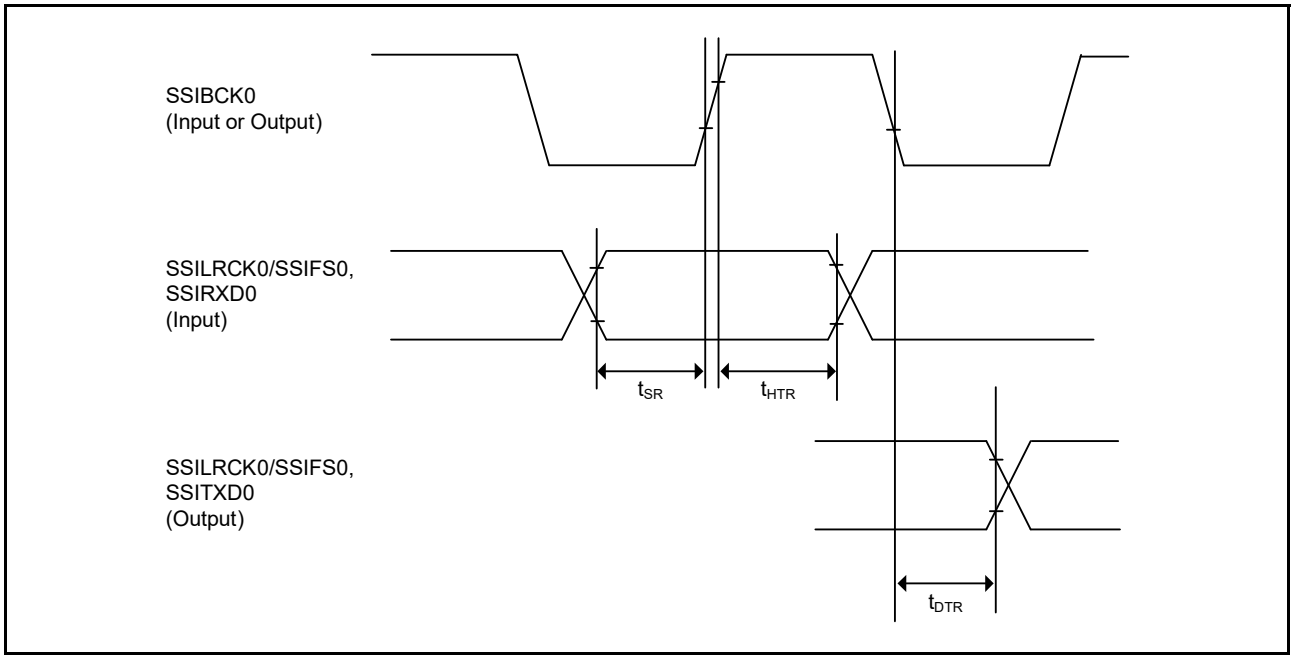

Figure 2.61 SSIE data transmit/receive timing (SSICR.BCKP = 0)

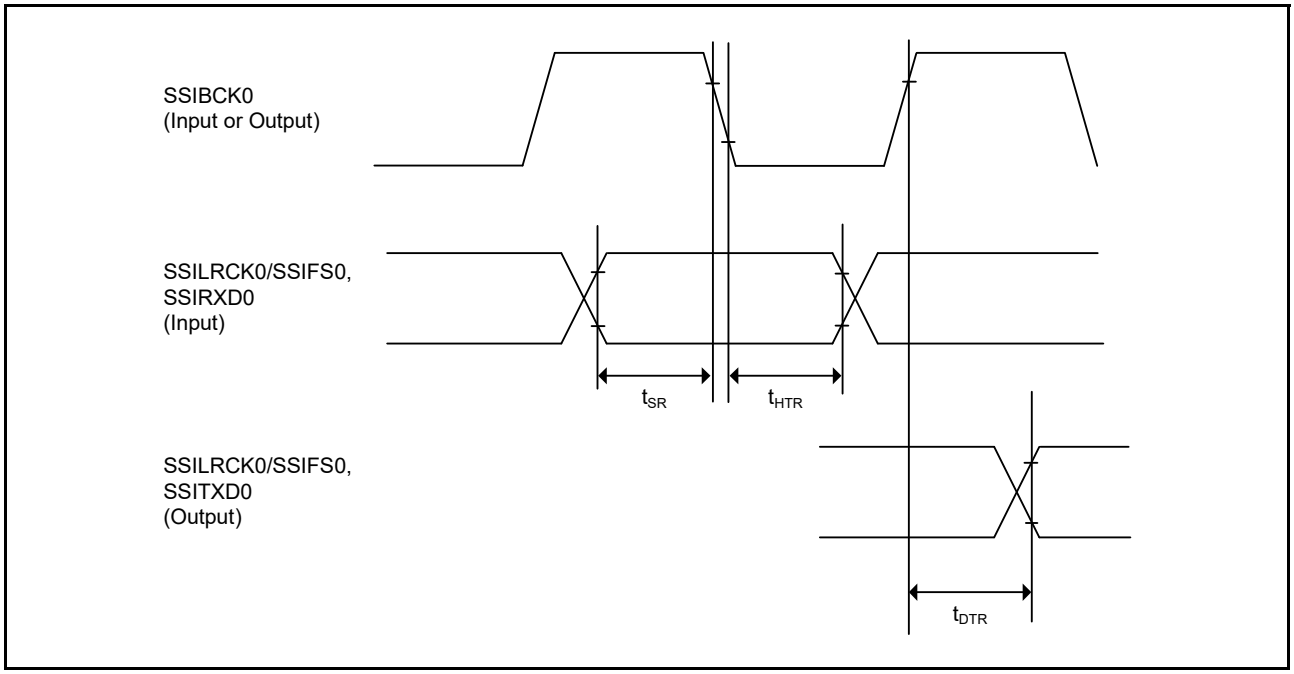

Figure 2.62 SSIE data transmit/receive timing (SSICR.BCKP = 1)

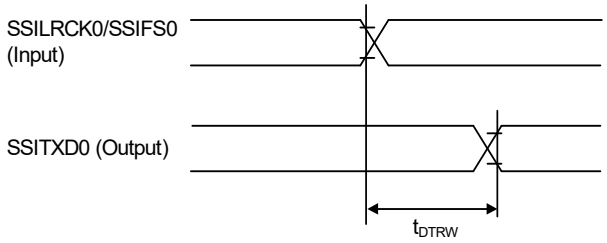

MSB bit output delay from SSILRCK0/SSIFS0 change time for
slave transmitter when DEL = 1, SDTA = 0 or DEL = 1, SDTA = 1, SWL[2:0] = DWL[2:0]

Figure 2.63 SSIE data output delay from SSILRCK0/SSIFS0 change time

2.3.12 CLKOUT Timing

Table 2.39 CLKOUT timing

Parameter			Symbol	Min	Max	Unit*1	Test conditions
CLKOUT	CLKOUT pin output cycle*1	VCC = 2.7 V or above	t_{Ccyc}	62.5	-	ns	Figure 2.64
		VCC = 1.8 V or above		125	-		
		VCC = 1.6 V or above		250	-		
	CLKOUT pin high pulse width*2	VCC = 2.7 V or above	t_{CH}	15	-	ns	
		VCC = 1.8 V or above		30	-		
		VCC = 1.6 V or above		150	-		
	CLKOUT pin low pulse width*2	VCC = 2.7 V or above	t_{CL}	15	-	ns	
		VCC = 1.8 V or above		30	-		
		VCC = 1.6 V or above		150	-		
	CLKOUT pin output rise time	VCC = 2.7 V or above	t_{Cr}	-	12	ns	
		VCC = 1.8 V or above		-	25		
		VCC = 1.6 V or above		-	50		
	CLKOUT pin output fall time	VCC = 2.7 V or above	t_{Cf}	-	12	ns	
		VCC = 1.8 V or above		-	25		
		VCC = 1.6 V or above		-	50		

Note 1. When the EXTAL external clock input or an oscillator is used with division by 1 (the CKOCR.CKOSEL[2:0] bits are 011b and the CKOCR.CKODIV[2:0] bits are 000b) to output from CLKOUT, the above should be satisfied with an input duty cycle of 45 to 55%.

Note 2. When the MOCO is selected as the clock output source (the CKOCR.CKOSEL[2:0] bits are 001b), set the clock output division ratio selection to be divided by 2 (the CKOCR.CKODIV[2:0] bits are 001b).

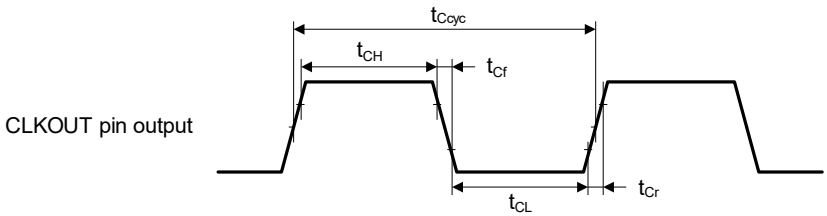

Test conditions: V_{OH} = VCC × 0.7, V_{OL} = VCC × 0.3, I_{OH} = -1.0 mA, I_{OL} = 1.0 mA, C = 30 pF

Figure 2.64 CLKOUT output timing

2.4 USB Characteristics

2.4.1 USBFS Timing

Table 2.40 USB characteristics

Conditions: VCC = VCC_USB = 3.0 to 3.6 V, T_a = -20 to +85°C (USBCLKSEL = 1), T_a = -40 to +105°C (USBCLKSEL = 0)

Parameter			Symbol	Min	Max	Unit	Test conditions
Input characteristics	Input high level voltage		V_{IH}	2.0	-	V	-
	Input low level voltage		V_{IL}	-	0.8	V	-
	Differential input sensitivity		V_{DI}	0.2	-	V	|USB_DP - USB_DM |
	Differential common mode range		V_{CM}	0.8	2.5	V	-
Output characteristics	Output high level voltage		V_{OH}	2.8	VCC_USB	V	I_{OH} = -200 μA
	Output low level voltage		V_{OL}	0.0	0.3	V	I_{OL} = 2 mA
	Cross-over voltage		V_{CRS}	1.3	2.0	V	Figure 2.65, Figure 2.66, Figure 2.67
	Rise time	FS	t_r	4	20	ns	
		LS		75	300		
	Fall time	FS	t_f	4	20	ns	
		LS		75	300		
	Rise/fall time ratio	FS	t_r/t_f	90	111.11	%	
		LS		80	125		
	Output resistance		Z_{DRV}	28	44	Ω	(Adjusting the resistance of external elements is not necessary.)
VBUS characteristics	VBUS input voltage		V_{IH}	VCC × 0.8	-	V	-
			V_{IL}	-	VCC × 0.2	V	-
Pull-up, pull-down	Pull-down resistor		R_{PD}	14.25	24.80	kΩ	-
	Pull-up resistor		R_{PUI}	0.9	1.575	kΩ	During idle state
			R_{PUA}	1.425	3.09	kΩ	During reception
Battery Charging Specification Ver 1.2	D + sink current		I_{DP_SINK}	25	175	μA	-
	D - sink current		I_{DM_SINK}	25	175	μA	-
	DCD source current		I_{DP_SRC}	7	13	μA	-
	Data detection voltage		V_{DAT_REF}	0.25	0.4	V	-
	D + source voltage		V_{DP_SRC}	0.5	0.7	V	Output current = 250 μA
	D - source voltage		V_{DM_SRC}	0.5	0.7	V	Output current = 250 μA

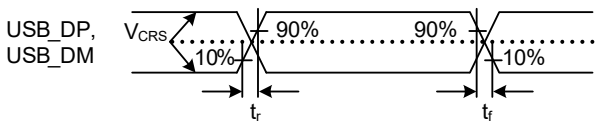

Figure 2.65 USB_DP and USB_DM output timing

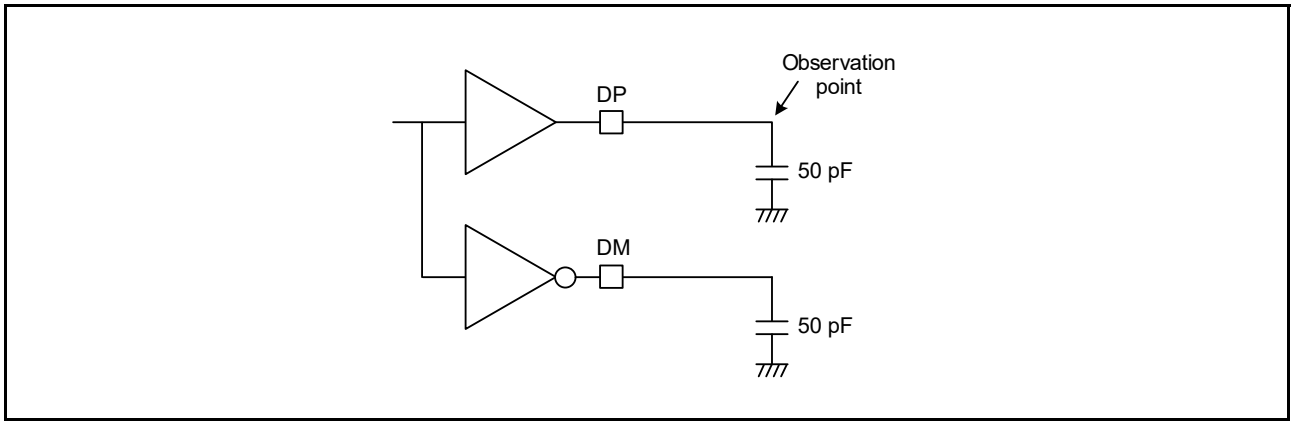

Figure 2.66 Test circuit for Full-Speed (FS) connection

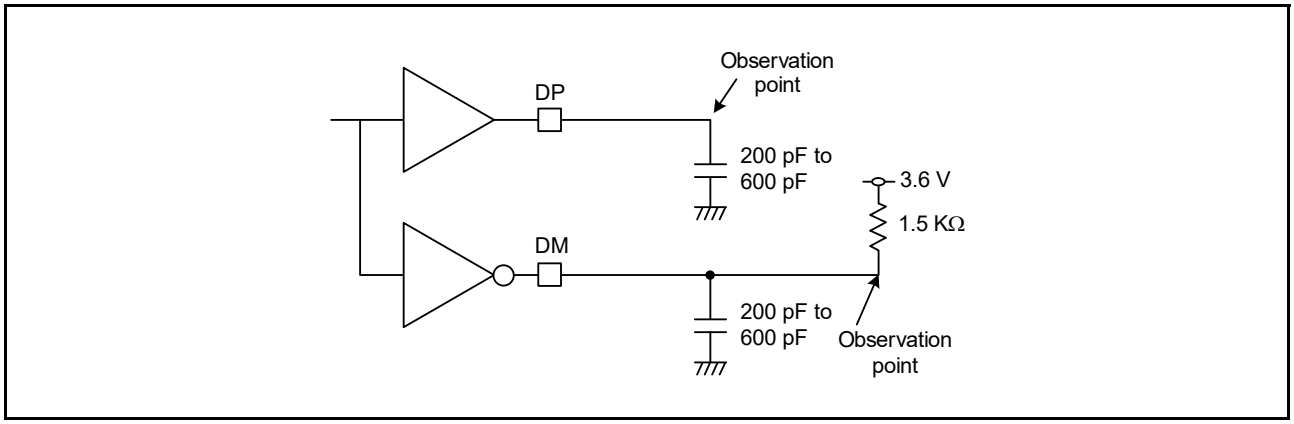

Figure 2.67 Test circuit for Low-Speed (LS) connection

2.4.2 USB External Supply

Table 2.41 USB regulator

Parameter		Min	Typ	Max	Unit	Test conditions
VCC_USB supply current	VCC_USB_LDO ≥ 3.8V	-	-	50	mA	-
	VCC_USB_LDO ≥ 4.5V	-	-	100	mA	-
VCC_USB supply voltage		3.0	-	3.6	V	-

2.5 ADC14 Characteristics

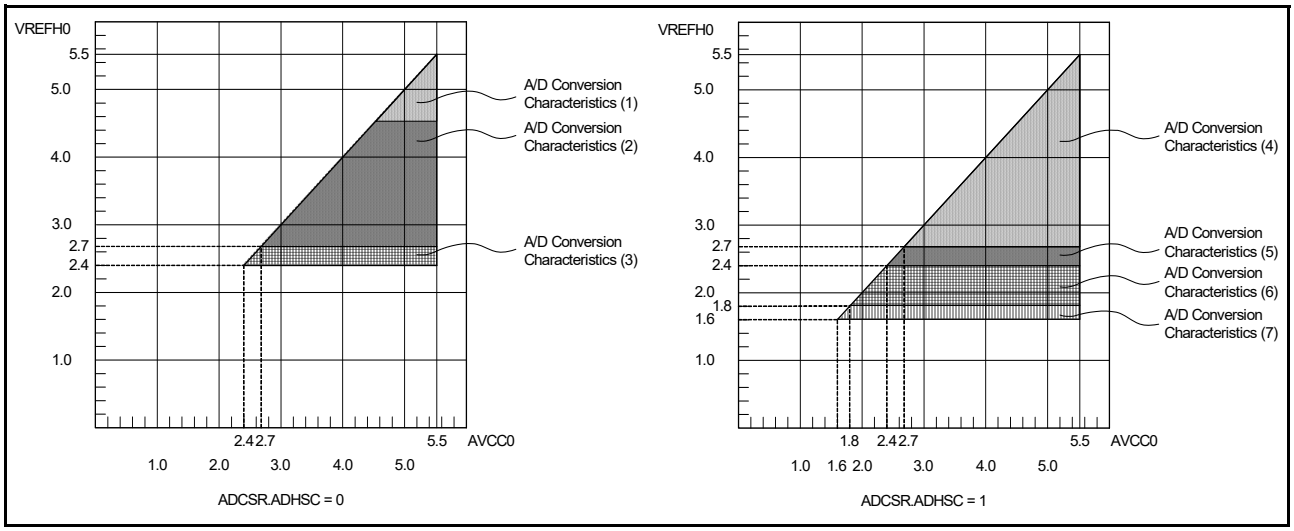

Figure 2.68 AVCC0 to VREFH0 voltage range

Table 2.42 A/D conversion characteristics (1) in high-speed A/D conversion mode (1 of 2)

Conditions: VCC = AVCC0 = 4.5 to 5.5 V, VREFH0 = 4.5 to 5.5 V
Reference voltage range applied to the VREFH0 and VREFL0.

Parameter		Min	Typ	Max	Unit	Test conditions
Frequency		1	-	64	MHz	-
Analog input capacitance*2	Cs	-	-	8 (reference data)	pF	High-precision channel
		-	-	9 (reference data)	pF	Normal-precision channel
Analog input resistance	Rs	-	-	2.5 (reference data)	kΩ	High-precision channel
		-	-	6.7 (reference data)	kΩ	Normal-precision channel
Analog input voltage range	Ain	0	-	VREFH0	V	-
12-bit mode						
Resolution		-	-	12	Bit	-
Conversion time*1 (Operation at PCLKC = 64 MHz)	Permissible signal source impedance Max. = 0.3 kΩ	0.70	-	-	μs	High-precision channel ADCSR.ADHSC = 0 ADSSTRn.SST[7:0] = 0Dh
		1.13	-	-	μs	Normal-precision channel ADCSR.ADHSC = 0 ADSSTRn.SST[7:0] = 28h
Offset error		-	±0.5	±4.5	LSB	High-precision channel
				±6.0	LSB	Other than above
Full-scale error		-	±0.75	±4.5	LSB	High-precision channel
				±6.0	LSB	Other than above
Quantization error		-	±0.5	-	LSB	-
Absolute accuracy		-	±1.25	±5.0	LSB	High-precision channel
				±8.0	LSB	Other than above
DNL differential nonlinearity error		-	±1.0	-	LSB	-
INL integral nonlinearity error		-	±1.0	±3.0	LSB	-
14-bit mode						
Resolution		-	-	14	Bit	-

Table 2.42 A/D conversion characteristics (1) in high-speed A/D conversion mode (2 of 2)
Conditions: VCC = AVCC0 = 4.5 to 5.5 V, VREFH0 = 4.5 to 5.5 V
Reference voltage range applied to the VREFH0 and VREFL0.

Parameter		Min	Typ	Max	Unit	Test conditions
Conversion time*1 (Operation at PCLKC = 64 MHz)	Permissible signal source impedance Max. = 0.3 kΩ	0.80	-	-	μs	High-precision channel ADCSR.ADHSC = 0 ADSSTRn.SST[7:0] = 0Dh
		1.22	-	-	μs	Normal-precision channel ADCSR.ADHSC = 0 ADSSTRn.SST[7:0] = 28h
Offset error		-	±2.0	±18	LSB	High-precision channel
				±24.0	LSB	Other than above
Full-scale error		-	±3.0	±18	LSB	High-precision channel
				±24.0	LSB	Other than above
Quantization error		-	±0.5	-	LSB	-
Absolute accuracy		-	±5.0	±20	LSB	High-precision channel
				±32.0	LSB	Other than above
DNL differential nonlinearity error		-	±4.0	-	LSB	-
INL integral nonlinearity error		-	±4.0	±12.0	LSB	-

Note: The characteristics apply when no pin functions other than 14-bit A/D converter input are used. Absolute accuracy does not include quantization errors. Offset error, full-scale error, DNL differential nonlinearity error, and INL integral nonlinearity error do not include quantization errors.
Note 1. The conversion time is the sum of the sampling time and the comparison time. The number of sampling states is indicated for the test conditions.
Note 2. Except for I/O input capacitance (C_{in}), see section 2.2.4, I/O V_{OH}, V_{OL}, and Other Characteristics.

Table 2.43 A/D conversion characteristics (2) in high-speed A/D conversion mode (1 of 2)
Conditions: VCC = AVCC0 = 2.7 to 5.5 V, VREFH0 = 2.7 to 5.5 V
Reference voltage range applied to the VREFH0 and VREFL0.

Parameter		Min	Typ	Max	Unit	Test conditions
Frequency		1	-	48	MHz	-
Analog input capacitance*2	Cs	-	-	8 (reference data)	pF	High-precision channel
		-	-	9 (reference data)	pF	Normal-precision channel
Analog input resistance	Rs	-	-	2.5 (reference data)	kΩ	High-precision channel
		-	-	6.7 (reference data)	kΩ	Normal-precision channel
Analog input voltage range	Ain	0	-	VREFH0	V	-
12-bit mode						
Resolution		-	-	12	Bit	-
Conversion time*1 (Operation at PCLKC = 48 MHz)	Permissible signal source impedance Max. = 0.3 kΩ	0.94	-	-	μs	High-precision channel ADCSR.ADHSC = 0 ADSSTRn.SST[7:0] = 0Dh
		1.50	-	-	μs	Normal-precision channel ADCSR.ADHSC = 0 ADSSTRn.SST[7:0] = 28h
Offset error		-	±0.5	±4.5	LSB	High-precision channel
				±6.0	LSB	Other than above
Full-scale error		-	±0.75	±4.5	LSB	High-precision channel
				±6.0	LSB	Other than above
Quantization error		-	±0.5	-	LSB	-
Absolute accuracy		-	±1.25	±5.0	LSB	High-precision channel
				±8.0	LSB	Other than above
DNL differential nonlinearity error		-	±1.0	-	LSB	-
INL integral nonlinearity error		-	±1.0	±3.0	LSB	-

Table 2.43 A/D conversion characteristics (2) in high-speed A/D conversion mode (2 of 2)
Conditions: VCC = AVCC0 = 2.7 to 5.5 V, VREFH0 = 2.7 to 5.5 V
Reference voltage range applied to the VREFH0 and VREFL0.

Parameter		Min	Typ	Max	Unit	Test conditions
14-bit mode						
Resolution		-	-	14	Bit	-
Conversion time*1 (Operation at PCLKC = 48 MHz)	Permissible signal source impedance Max. = 0.3 kΩ	1.06	-	-	μs	High-precision channel ADCSR.ADHSC = 0 ADSSTRn.SST[7:0] = 0Dh
		1.63	-	-	μs	Normal-precision channel ADCSR.ADHSC = 0 ADSSTRn.SST[7:0] = 28h
Offset error		-	±2.0	±18	LSB	High-precision channel
				±24.0	LSB	Other than above
Full-scale error		-	±3.0	±18	LSB	High-precision channel
				±24.0	LSB	Other than above
Quantization error		-	±0.5	-	LSB	-
Absolute accuracy		-	±5.0	±20	LSB	High-precision channel
				±32.0	LSB	Other than above
DNL differential nonlinearity error		-	±4.0	-	LSB	-
INL integral nonlinearity error		-	±4.0	±12.0	LSB	-

Note: The characteristics apply when no pin functions other than 14-bit A/D converter input are used. Absolute accuracy does not include quantization errors. Offset error, full-scale error, DNL differential nonlinearity error, and INL integral nonlinearity error do not include quantization errors.
Note 1. The conversion time is the sum of the sampling time and the comparison time. The number of sampling states is indicated for the test conditions.
Note 2. Except for I/O input capacitance (C_{in}), see section 2.2.4, I/O V_{OH}, V_{OL}, and Other Characteristics.

Table 2.44 A/D conversion characteristics (3) in high-speed A/D conversion mode (1 of 2)
Conditions: VCC = AVCC0 = 2.4 to 5.5 V, VREFH0 = 2.4 to 5.5 V
Reference voltage range applied to the VREFH0 and VREFL0.

Parameter		Min	Typ	Max	Unit	Test conditions
Frequency		1	-	32	MHz	-
Analog input capacitance*2	Cs	-	-	8 (reference data)	pF	High-precision channel
		-	-	9 (reference data)	pF	Normal-precision channel
Analog input resistance	Rs	-	-	2.5 (reference data)	kΩ	High-precision channel
		-	-	6.7 (reference data)	kΩ	Normal-precision channel
Analog input voltage range	Ain	0	-	VREFH0	V	-
12-bit mode						
Resolution		-	-	12	Bit	-
Conversion time*1 (Operation at PCLKC = 32 MHz)	Permissible signal source impedance Max. = 1.3 kΩ	1.41	-	-	μs	High-precision channel ADCSR.ADHSC = 0 ADSSTRn.SST[7:0] = 0Dh
		2.25	-	-	μs	Normal-precision channel ADCSR.ADHSC = 0 ADSSTRn.SST[7:0] = 28h
Offset error		-	±0.5	±4.5	LSB	High-precision channel
				±6.0	LSB	Other than above
Full-scale error		-	±0.75	±4.5	LSB	High-precision channel
				±6.0	LSB	Other than above
Quantization error		-	±0.5	-	LSB	-
Absolute accuracy		-	±1.25	±5.0	LSB	High-precision channel
				±8.0	LSB	Other than above

Table 2.44 A/D conversion characteristics (3) in high-speed A/D conversion mode (2 of 2)
Conditions: VCC = AVCC0 = 2.4 to 5.5 V, VREFH0 = 2.4 to 5.5 V
Reference voltage range applied to the VREFH0 and VREFL0.

Parameter		Min	Typ	Max	Unit	Test conditions
DNL differential nonlinearity error		-	±1.0	-	LSB	-
INL integral nonlinearity error		-	±1.0	±3.0	LSB	-
14-bit mode						
Resolution		-	-	14	Bit	-
Conversion time*1 (Operation at PCLKC = 32 MHz)	Permissible signal source impedance Max. = 1.3 kΩ	1.59	-	-	μs	High-precision channel ADCSR.ADHSC = 0 ADSSTRn.SST[7:0] = 0Dh
		2.44	-	-	μs	Normal-precision channel ADCSR.ADHSC = 0 ADSSTRn.SST[7:0] = 28h
Offset error		-	±2.0	±18	LSB	High-precision channel
				±24.0	LSB	Other than above
Full-scale error		-	±3.0	±18	LSB	High-precision channel
				±24.0	LSB	Other than above
Quantization error		-	±0.5	-	LSB	-
Absolute accuracy		-	±5.0	±20	LSB	High-precision channel
				±32.0	LSB	Other than above
DNL differential nonlinearity error		-	±4.0	-	LSB	-
INL integral nonlinearity error		-	±4.0	±12.0	LSB	-

Note: The characteristics apply when no pin functions other than 14-bit A/D converter input are used. Absolute accuracy does not include quantization errors. Offset error, full-scale error, DNL differential nonlinearity error, and INL integral nonlinearity error do not include quantization errors.
Note 1. The conversion time is the sum of the sampling time and the comparison time. The number of sampling states is indicated for the test conditions.
Note 2. Except for I/O input capacitance (C_{in}), see section 2.2.4, I/O V_{OH}, V_{OL}, and Other Characteristics.

Table 2.45 A/D conversion characteristics (4) in low power A/D conversion mode (1 of 2)
Conditions: VCC = AVCC0 = 2.7 to 5.5 V, VREFH0 = 2.7 to 5.5 V
Reference voltage range applied to the VREFH0 and VREFL0.

Parameter		Min	Typ	Max	Unit	Test conditions
Frequency		1	-	24	MHz	-
Analog input capacitance*2	Cs	-	-	8 (reference data)	pF	High-precision channel
		-	-	9 (reference data)	pF	Normal-precision channel
Analog input resistance	Rs	-	-	2.5 (reference data)	kΩ	High-precision channel
		-	-	6.7 (reference data)	kΩ	Normal-precision channel
Analog input voltage range	Ain	0	-	VREFH0	V	-
12-bit mode						
Resolution		-	-	12	Bit	-
Conversion time*1 (Operation at PCLKC = 24 MHz)	Permissible signal source impedance Max. = 1.1 kΩ	2.25	-	-	μs	High-precision channel ADCSR.ADHSC = 1 ADSSTRn.SST[7:0] = 0Dh
		3.38	-	-	μs	Normal-precision channel ADCSR.ADHSC = 1 ADSSTRn.SST[7:0] = 28h
Offset error		-	±0.5	±4.5	LSB	High-precision channel
				±6.0	LSB	Other than above
Full-scale error		-	±0.75	±4.5	LSB	High-precision channel
				±6.0	LSB	Other than above
Quantization error		-	±0.5	-	LSB	-

Table 2.45 A/D conversion characteristics (4) in low power A/D conversion mode (2 of 2)
Conditions: VCC = AVCC0 = 2.7 to 5.5 V, VREFH0 = 2.7 to 5.5 V
Reference voltage range applied to the VREFH0 and VREFL0.

Parameter		Min	Typ	Max	Unit	Test conditions
Absolute accuracy		-	±1.25	±5.0	LSB	High-precision channel
				±8.0	LSB	Other than above
DNL differential nonlinearity error		-	±1.0	-	LSB	-
INL integral nonlinearity error		-	±1.0	±3.0	LSB	-
14-bit mode						
Resolution		-	-	14	Bit	-
Conversion time*1 (Operation at PCLKC = 24 MHz)	Permissible signal source impedance Max. = 1.1 kΩ	2.50	-	-	μs	High-precision channel ADCSR.ADHSC = 1 ADSSTRn.SST[7:0] = 0Dh
		3.63	-	-	μs	Normal-precision channel ADCSR.ADHSC = 1 ADSSTRn.SST[7:0] = 28h
Offset error		-	±2.0	±18	LSB	High-precision channel
				±24.0	LSB	Other than above
Full-scale error		-	±3.0	±18	LSB	High-precision channel
				±24.0	LSB	Other than above
Quantization error		-	±0.5	-	LSB	-
Absolute accuracy		-	±5.0	±20	LSB	High-precision channel
				±32.0	LSB	Other than above
DNL differential nonlinearity error		-	±4.0	-	LSB	-
INL integral nonlinearity error		-	±4.0	±12.0	LSB	-

Note: The characteristics apply when no pin functions other than 14-bit A/D converter input are used. Absolute accuracy does not include quantization errors. Offset error, full-scale error, DNL differential nonlinearity error, and INL integral nonlinearity error do not include quantization errors.
Note 1. The conversion time is the sum of the sampling time and the comparison time. The number of sampling states is indicated for the test conditions.
Note 2. Except for I/O input capacitance (C_{in}), see section 2.2.4, I/O V_{OH}, V_{OL}, and Other Characteristics.

Table 2.46 A/D conversion characteristics (5) in low power A/D conversion mode (1 of 2)
Conditions: VCC = AVCC0 = 2.4 to 5.5 V, VREFH0 = 2.4 to 5.5 V
Reference voltage range applied to the VREFH0 and VREFL0.

Parameter		Min	Typ	Max	Unit	Test conditions
Frequency		1	-	16	MHz	-
Analog input capacitance*2	Cs	-	-	8 (reference data)	pF	High-precision channel
		-	-	9 (reference data)	pF	Normal-precision channel
Analog input resistance	Rs	-	-	2.5 (reference data)	kΩ	High-precision channel
		-	-	6.7 (reference data)	kΩ	Normal-precision channel
Analog input voltage range	Ain	0	-	VREFH0	V	-
12-bit mode						
Resolution		-	-	12	Bit	-
Conversion time*1 (Operation at PCLKC = 16 MHz)	Permissible signal source impedance Max. = 2.2 kΩ	3.38	-	-	μs	High-precision channel ADCSR.ADHSC = 1 ADSSTRn.SST[7:0] = 0Dh
		5.06	-	-	μs	Normal-precision channel ADCSR.ADHSC = 1 ADSSTRn.SST[7:0] = 28h
Offset error		-	±0.5	±4.5	LSB	High-precision channel
				±6.0	LSB	Other than above

Table 2.46 A/D conversion characteristics (5) in low power A/D conversion mode (2 of 2)
Conditions: VCC = AVCC0 = 2.4 to 5.5 V, VREFH0 = 2.4 to 5.5 V
Reference voltage range applied to the VREFH0 and VREFL0.

Parameter		Min	Typ	Max	Unit	Test conditions
Full-scale error		-	±0.75	±4.5	LSB	High-precision channel
				±6.0	LSB	Other than above
Quantization error		-	±0.5	-	LSB	-
Absolute accuracy		-	±1.25	±5.0	LSB	High-precision channel
				±8.0	LSB	Other than above
DNL differential nonlinearity error		-	±1.0	-	LSB	-
INL integral nonlinearity error		-	±1.0	±3.0	LSB	-
14-bit mode						
Resolution		-	-	14	Bit	-
Conversion time*1 (Operation at PCLKC = 16 MHz)	Permissible signal source impedance Max. = 2.2 kΩ	3.75	-	-	μs	High-precision channel ADCSR.ADHSC = 1 ADSSTRn.SST[7:0] = 0Dh
		5.44	-	-	μs	Normal-precision channel ADCSR.ADHSC = 1 ADSSTRn.SST[7:0] = 28h
Offset error		-	±2.0	±18	LSB	High-precision channel
				±24.0	LSB	Other than above
Full-scale error		-	±3.0	±18	LSB	High-precision channel
				±24.0	LSB	Other than above
Quantization error		-	±0.5	-	LSB	-
Absolute accuracy		-	±5.0	±20	LSB	High-precision channel
				±32.0	LSB	Other than above
DNL differential nonlinearity error		-	±4.0	-	LSB	-
INL integral nonlinearity error		-	±4.0	±12.0	LSB	-

Note: The characteristics apply when no pin functions other than 14-bit A/D converter input are used. Absolute accuracy does not include quantization errors. Offset error, full-scale error, DNL differential nonlinearity error, and INL integral nonlinearity error do not include quantization errors.
Note 1. The conversion time is the sum of the sampling time and the comparison time. The number of sampling states is indicated for the test conditions.
Note 2. Except for I/O input capacitance (C_{in}), see section 2.2.4, I/O V_{OH}, V_{OL}, and Other Characteristics.

Table 2.47 A/D conversion characteristics (6) in low power A/D conversion mode (1 of 2)
Conditions: VCC = AVCC0 = 1.8 to 5.5 V (AVCC0 = VCC when VCC < 2.0 V), VREFH0 = 1.8 to 5.5 V
Reference voltage range applied to the VREFH0 and VREFL0.

Parameter		Min	Typ	Max	Unit	Test conditions
Frequency		1	-	8	MHz	-
Analog input capacitance*2	Cs	-	-	8 (reference data)	pF	High-precision channel
		-	-	9 (reference data)	pF	Normal-precision channel
Analog input resistance	Rs	-	-	3.8 (reference data)	kΩ	High-precision channel
		-	-	8.2 (reference data)	kΩ	Normal-precision channel
Analog input voltage range	Ain	0	-	VREFH0	V	-
12-bit mode						
Resolution		-	-	12	Bit	-
Conversion time*1 (Operation at PCLKC = 8 MHz)	Permissible signal source impedance Max. = 5 kΩ	6.75	-	-	μs	High-precision channel ADCSR.ADHSC = 1 ADSSTRn.SST[7:0] = 0Dh
		10.13	-	-	μs	Normal-precision channel ADCSR.ADHSC = 1 ADSSTRn.SST[7:0] = 28h

Table 2.47 A/D conversion characteristics (6) in low power A/D conversion mode (2 of 2)
Conditions: VCC = AVCC0 = 1.8 to 5.5 V (AVCC0 = VCC when VCC < 2.0 V), VREFH0 = 1.8 to 5.5 V
Reference voltage range applied to the VREFH0 and VREFL0.

Parameter		Min	Typ	Max	Unit	Test conditions
Offset error		-	±1.0	±7.5	LSB	High-precision channel
				±10.0	LSB	Other than above
Full-scale error		-	±1.5	±7.5	LSB	High-precision channel
				±10.0	LSB	Other than above
Quantization error		-	±0.5	-	LSB	-
Absolute accuracy		-	±3.0	±8.0	LSB	High-precision channel
				±12.0	LSB	Other than above
DNL differential nonlinearity error		-	±1.0	-	LSB	-
INL integral nonlinearity error		-	±1.0	±3.0	LSB	-
14-bit mode						
Resolution		-	-	14	Bit	-
Conversion time*1 (Operation at PCLKC = 8 MHz)	Permissible signal source impedance Max. = 5 kΩ	7.50	-	-	μs	High-precision channel ADCSR.ADHSC = 1 ADSSTRn.SST[7:0] = 0Dh
		10.88	-	-	μs	Normal-precision channel ADCSR.ADHSC = 1 ADSSTRn.SST[7:0] = 28h
Offset error		-	±4.0	±30.0	LSB	High-precision channel
				±40.0	LSB	Other than above
Full-scale error		-	±6.0	±30.0	LSB	High-precision channel
				±40.0	LSB	Other than above
Quantization error		-	±0.5	-	LSB	-
Absolute accuracy		-	±12.0	±32.0	LSB	High-precision channel
				±48.0	LSB	Other than above
DNL differential nonlinearity error		-	±4.0	-	LSB	-
INL integral nonlinearity error		-	±4.0	±12.0	LSB	-

Note: The characteristics apply when no pin functions other than 14-bit A/D converter input are used. Absolute accuracy does not include quantization errors. Offset error, full-scale error, DNL differential nonlinearity error, and INL integral nonlinearity error do not include quantization errors.
Note 1. The conversion time is the sum of the sampling time and the comparison time. The number of sampling states is indicated for the test conditions.
Note 2. Except for I/O input capacitance (C_{in}), see section 2.2.4, I/O V_{OH}, V_{OL}, and Other Characteristics.

Table 2.48 A/D conversion characteristics (7) in low power A/D conversion mode (1 of 2)
Conditions: VCC = AVCC0 = 1.6 to 5.5 V (AVCC0 = VCC when VCC < 2.0 V), VREFH0 = 1.6 to 5.5 V
Reference voltage range applied to the VREFH0 and VREFL0.

Parameter		Min	Typ	Max	Unit	Test conditions
Frequency		1	-	4	MHz	-
Analog input capacitance*2	Cs	-	-	8 (reference data)	pF	High-precision channel
		-	-	9 (reference data)	pF	Normal-precision channel
Analog input resistance	Rs	-	-	13.1 (reference data)	kΩ	High-precision channel
		-	-	14.3 (reference data)	kΩ	Normal-precision channel
Analog input voltage range	Ain	0	-	VREFH0	V	-
12-bit mode						
Resolution		-	-	12	Bit	-

Table 2.48 A/D conversion characteristics (7) in low power A/D conversion mode (2 of 2)

Conditions: VCC = AVCC0 = 1.6 to 5.5 V (AVCC0 = VCC when VCC < 2.0 V), VREFH0 = 1.6 to 5.5 V
Reference voltage range applied to the VREFH0 and VREFL0.

Parameter		Min	Typ	Max	Unit	Test conditions
Conversion time*1 (Operation at PCLKC = 4 MHz)	Permissible signal source impedance Max. = 9.9 kΩ	13.5	-	-	μs	High-precision channel ADCSR.ADHSC = 1 ADSSTRn.SST[7:0] = 0Dh
		20.25	-	-	μs	Normal-precision channel ADCSR.ADHSC = 1 ADSSTRn.SST[7:0] = 28h
Offset error		-	±1.0	±7.5	LSB	High-precision channel
				±10.0	LSB	Other than above
Full-scale error		-	±1.5	±7.5	LSB	High-precision channel
				±10.0	LSB	Other than above
Quantization error		-	±0.5	-	LSB	-
Absolute accuracy		-	±3.0	±8.0	LSB	High-precision channel
				±12.0	LSB	Other than above
DNL differential nonlinearity error		-	±1.0	-	LSB	-
INL integral nonlinearity error		-	±1.0	±3.0	LSB	-
14-bit mode						
Resolution		-	-	14	Bit	-
Conversion time*1 (Operation at PCLKC = 4 MHz)	Permissible signal source impedance Max. = 9.9 kΩ	15.0	-	-	μs	High-precision channel ADCSR.ADHSC = 1 ADSSTRn.SST[7:0] = 0Dh
		21.75	-	-	μs	Normal-precision channel ADCSR.ADHSC = 1 ADSSTRn.SST[7:0] = 28h
Offset error		-	±4.0	±30.0	LSB	High-precision channel
				±40.0	LSB	Other than above
Full-scale error		-	±6.0	±30.0	LSB	High-precision channel
				±40.0	LSB	Other than above
Quantization error		-	±0.5	-	LSB	-
Absolute accuracy		-	±12.0	±32.0	LSB	High-precision channel
				±48.0	LSB	Other than above
DNL differential nonlinearity error		-	±4.0	-	LSB	-
INL integral nonlinearity error		-	±4.0	±12.0	LSB	-

Note: The characteristics apply when no pin functions other than 14-bit A/D converter input are used. Absolute accuracy does not include quantization errors. Offset error, full-scale error, DNL differential nonlinearity error, and INL integral nonlinearity error do not include quantization errors.

Note 1. The conversion time is the sum of the sampling time and the comparison time. The number of sampling states is indicated for the test conditions.

Note 2. Except for I/O input capacitance (C_{in}), see section 2.2.4, I/O V_{OH}, V_{OL}, and Other Characteristics.

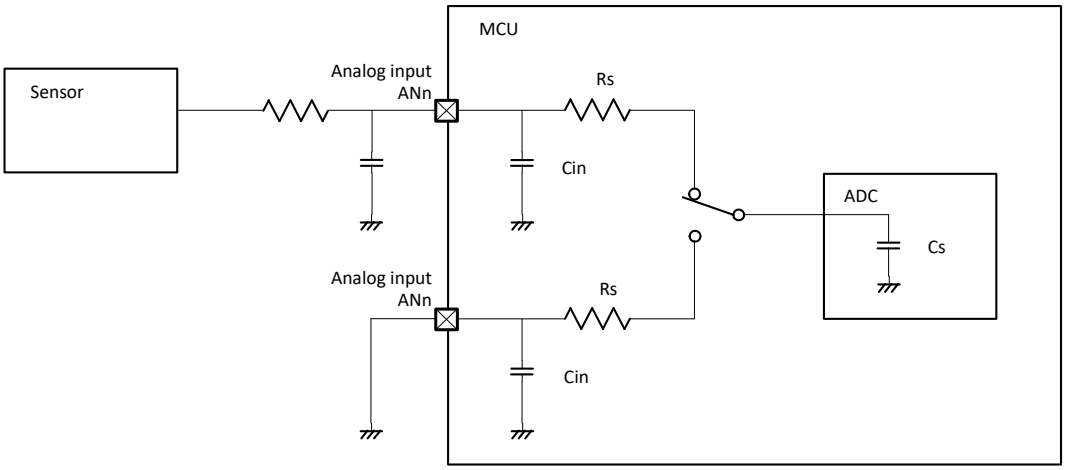

Figure 2.69 Equivalent circuit for analog input

Table 2.49 14-Bit A/D converter channel classification

Classification	Channel	Conditions	Remarks
High-precision channel	AN000 to AN014	AVCC0 = 1.6 to 5.5 V	Pins AN000 to AN014 cannot be used as general I/O, IRQ2, IRQ3 inputs, and TS transmission, when the A/D converter is in use
Normal-precision channel	AN016 to AN025		
Internal reference voltage input channel	Internal reference voltage	AVCC0 = 2.0 to 5.5 V	-
Temperature sensor input channel	Temperature sensor output	AVCC0 = 2.0 to 5.5 V	-

Table 2.50 A/D internal reference voltage characteristics

Conditions: VCC = AVCC0 = VREFH0 = 2.0 to 5.5 V*1

Parameter	Min	Typ	Max	Unit	Test conditions
Internal reference voltage input channel*2	1.36	1.43	1.50	V	-
Frequency*3	1	-	2	MHz	-
Sampling time*4	5.0	-	-	μs	-

Note 1. The internal reference voltage cannot be selected for input channels when AVCC0 < 2.0 V.
Note 2. The 14-bit A/D internal reference voltage indicates the voltage when the internal reference voltage is input to the 14-bit A/D converter.
Note 3. This is a parameter for ADC14 when the internal reference voltage is used as the high-potential reference voltage.
Note 4. This is a parameter for ADC14 when the internal reference voltage is selected for an analog input channel in ADC14.

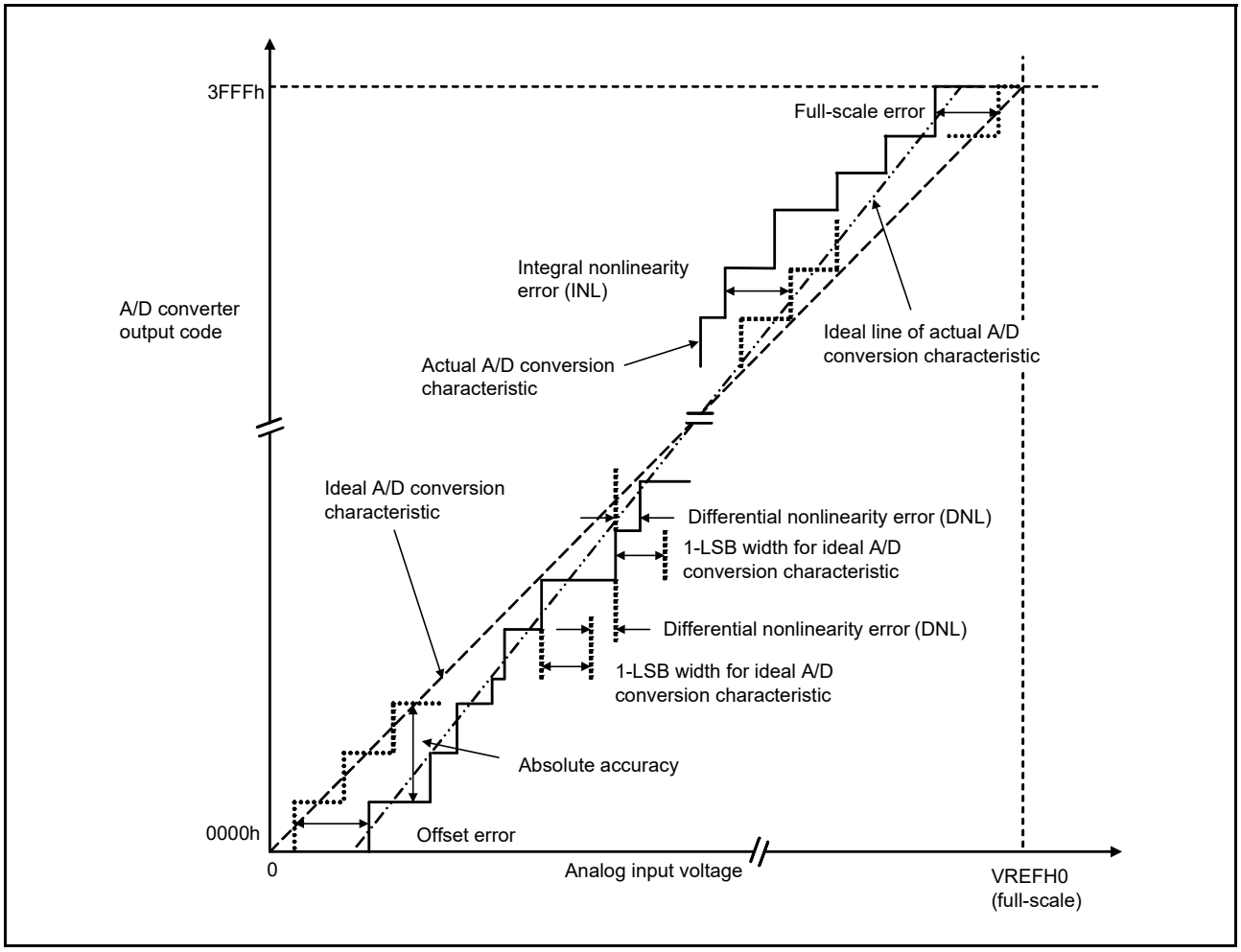

Figure 2.70 Illustration of 14-bit A/D converter characteristic terms

Absolute accuracy

Absolute accuracy is the difference between output code based on the theoretical A/D conversion characteristics, and the actual A/D conversion result. When measuring absolute accuracy, the voltage at the midpoint of the width of analog input voltage (1-LSB width), which can meet the expectation of outputting an equal code based on the theoretical A/D conversion characteristics, is used as the analog input voltage. For example, if 12-bit resolution is used and the reference voltage VREFH0 = 3.072 V, then 1-LSB width becomes 0.75 mV, and 0 mV, 0.75 mV, and 1.5 mV are used as the analog input voltages. If analog input voltage is 6 mV, an absolute accuracy of ±5 LSB means that the actual A/D conversion result is in the range of 003h to 00Dh, though an output code of 008h can be expected from the theoretical A/D conversion characteristics.

Integral nonlinearity error (INL)

Integral nonlinearity error is the maximum deviation between the ideal line when the measured offset and full-scale errors are zeroed, and the actual output code.

Differential nonlinearity error (DNL)

Differential nonlinearity error is the difference between 1-LSB width based on the ideal A/D conversion characteristics and the width of the actually output code.

Offset error

Offset error is the difference between the transition point of the ideal first output code and the actual first output code.

Full-scale error

Full-scale error is the difference between the transition point of the ideal last output code and the actual last output code.

2.6 DAC12 Characteristics

Table 2.51 D/A conversion characteristics (1)
Conditions: VCC = AVCC0 = 1.8 to 5.5 V
Reference voltage = VREFH or VREFL selected

Parameter	Min	Typ	Max	Unit	Test conditions
Resolution	-	-	12	bit	-
Resistive load	30	-	-	kΩ	-
Load capacitance	-	-	50	pF	-
Output voltage range	0.35	-	AVCC0 - 0.47	V	-
DNL differential nonlinearity error	-	±0.5	±1.0	LSB	-
INL integral nonlinearity error	-	±2.0	±8.0	LSB	-
Offset error	-	-	±20	mV	-
Full-scale error	-	-	±20	mV	-
Output impedance	-	5	-	Ω	-
Conversion time	-	-	30	μs	-

Table 2.52 D/A conversion characteristics (2)
Conditions: VCC = AVCC0 = 1.8 to 5.5 V
Reference voltage = AVCC0 or AVSS0 selected

Parameter	Min	Typ	Max	Unit	Test conditions
Resolution	-	-	12	bit	-
Resistive load	30	-	-	kΩ	-
Load capacitance	-	-	50	pF	-
Output voltage range	0.35	-	AVCC0 - 0.47	V	-
DNL differential nonlinearity error	-	±0.5	±2.0	LSB	-
INL integral nonlinearity error	-	±2.0	±8.0	LSB	-
Offset error	-	-	±30	mV	-
Full-scale error	-	-	±30	mV	-
Output impedance	-	5	-	Ω	-
Conversion time	-	-	30	μs	-

Table 2.53 D/A conversion characteristics (3)
Conditions: VCC = AVCC0 = 1.8 to 5.5 V
Reference voltage = internal reference voltage selected

Parameter	Min	Typ	Max	Unit	Test conditions
Resolution	-	-	12	bit	-
Internal reference voltage (Vbgr)	1.36	1.43	1.50	V	-
Resistive load	30	-	-	kΩ	-
Load capacitance	-	-	50	pF	-
Output voltage range	0.35	-	Vbgr	V	-
DNL differential nonlinearity error	-	±2.0	±16.0	LSB	-
INL integral nonlinearity error	-	±8.0	±16.0	LSB	-
Offset error	-	-	±30	mV	-
Output impedance	-	5	-	Ω	-
Conversion time	-	-	30	μs	-

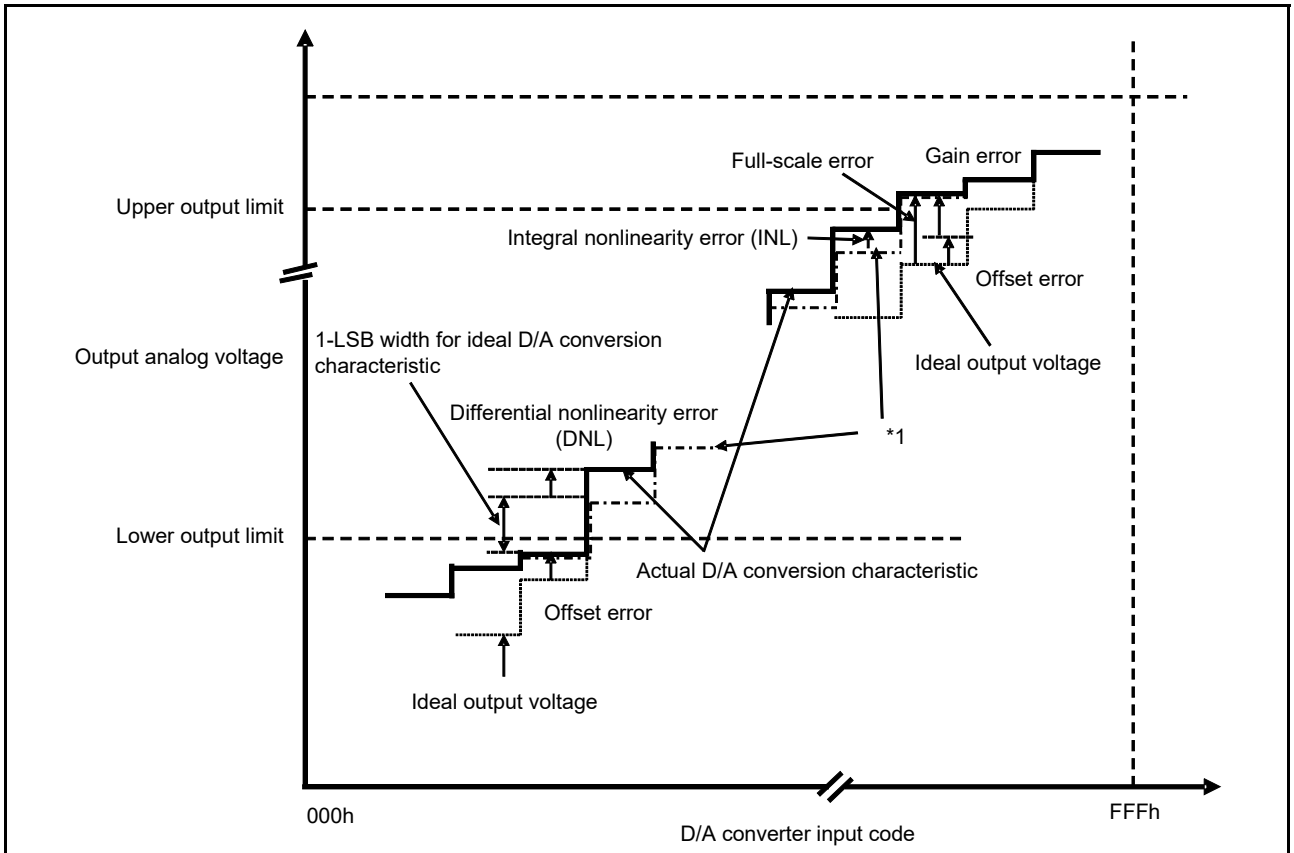

Note 1. Ideal D/A conversion output voltage that is adjusted so that offset and full scale errors are zeroed.

Figure 2.71 Illustration of D/A converter characteristic terms

Integral nonlinearity error (INL)

Integral nonlinearity error is the maximum deviation between the ideal output voltage based on the ideal conversion characteristic when the measured offset and full-scale errors are zeroed, and the actual output voltage.

Differential nonlinearity error (DNL)

Differential nonlinearity error is the difference between 1-LSB voltage width based on the ideal D/A conversion characteristics and the width of the actual output voltage.

Offset error

Offset error is the difference between the highest actual output voltage that falls below the lower output limit and the ideal output voltage based on the input code.

Full-scale error

Full-scale error is the difference between the lowest actual output voltage that exceeds the upper output limit and the ideal output voltage based on the input code.

2.7 TSN Characteristics

Table 2.54 TSN characteristics
Conditions: VCC = AVCC0 = 2.0 to 5.5 V

Parameter	Symbol	Min	Typ	Max	Unit	Test conditions
Relative accuracy	-	-	±1.5	-	°C	2.4 V or above
	-	-	±2.0	-	°C	Below 2.4 V
Temperature slope	-	-	-3.65	-	mV/°C	-
Output voltage (at 25°C)	-	-	1.05	-	V	VCC = 3.3 V
Temperature sensor start time	t_{START}	-	-	5	μs	-
Sampling time	-	5	-	-	μs	-

2.8 OSC Stop Detect Characteristics

Table 2.55 Oscillation stop detection circuit characteristics

Parameter	Symbol	Min	Typ	Max	Unit	Test conditions
Detection time	t_{dr}	-	-	1	ms	Figure 2.72

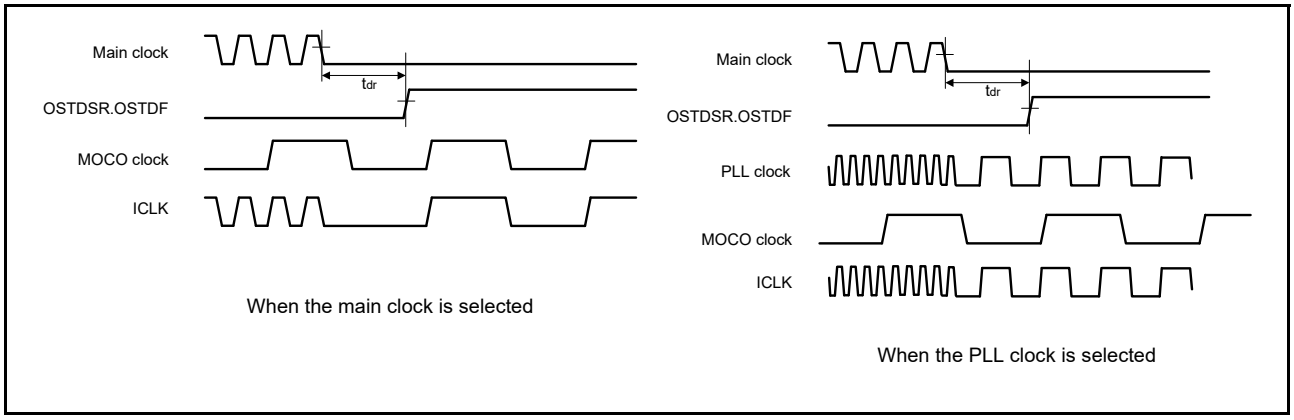

Figure 2.72 Oscillation stop detection timing

2.9 POR and LVD Characteristics

Table 2.56 Power-on reset circuit and voltage detection circuit characteristics (1)

Parameter		Symbol	Min	Typ	Max	Unit	Test conditions
Voltage detection level*1	Power-on reset (POR)	V_{POR}	1.27	1.42	1.57	V	Figure 2.73, Figure 2.74
	Voltage detection circuit (LVD0)*2	V_{det0_0}	3.68	3.85	4.00	V	Figure 2.75 At falling edge VCC
		V_{det0_1}	2.68	2.85	2.96		
		V_{det0_2}	2.38	2.53	2.64		
		V_{det0_3}	1.78	1.90	2.02		
		V_{det0_4}	1.60	1.69	1.82		
	Voltage detection circuit (LVD1)*3	V_{det1_0}	4.13	4.29	4.45	V	Figure 2.76 At falling edge VCC
		V_{det1_1}	3.98	4.16	4.30		
		V_{det1_2}	3.86	4.03	4.18		
		V_{det1_3}	3.68	3.86	4.00		
		V_{det1_4}	2.98	3.10	3.22		
		V_{det1_5}	2.89	3.00	3.11		
		V_{det1_6}	2.79	2.90	3.01		
		V_{det1_7}	2.68	2.79	2.90		
		V_{det1_8}	2.58	2.68	2.78		
		V_{det1_9}	2.48	2.58	2.68		
		V_{det1_A}	2.38	2.48	2.58		
		V_{det1_B}	2.10	2.20	2.30		
		V_{det1_C}	1.84	1.96	2.05		
		V_{det1_D}	1.74	1.86	1.95		
		V_{det1_E}	1.63	1.75	1.84		
		V_{det1_F}	1.60	1.65	1.73		
	Voltage detection circuit (LVD2)*4	V_{det2_0}	4.11	4.31	4.48	V	Figure 2.77 At falling edge VCC
		V_{det2_1}	3.97	4.17	4.34		
		V_{det2_2}	3.83	4.03	4.20		
		V_{det2_3}	3.64	3.84	4.01		

Note 1. These characteristics apply when noise is not superimposed on the power supply. When a setting causes this voltage detection level to overlap with that of the voltage detection circuit, it cannot be specified whether LVD1 or LVD2 is used for voltage detection.

Note 2. # in the symbol $V_{det0_\#}$ denotes the value of the OFS1.VDSEL1[2:0] bits.

Note 3. # in the symbol $V_{det1_\#}$ denotes the value of the LVDLVLR.LVD1LVL[4:0] bits.

Note 4. # in the symbol $V_{det2_\#}$ denotes the value of the LVDLVLR.LVD2LVL[2:0] bits.

Table 2.57 Power-on reset circuit and voltage detection circuit characteristics (2)

Parameter		Symbol	Min	Typ	Max	Unit	Test conditions
Wait time after power-on reset cancellation	LVD0:enable	t_{POR}	-	1.7	-	ms	-
	LVD0:disable	t_{POR}	-	1.3	-	ms	-
Wait time after voltage monitor 0,1,2 reset cancellation	LVD0:enable*1	$t_{LVD0,1,2}$	-	0.6	-	ms	-
	LVD0:disable*2	$t_{LVD1,2}$	-	0.2	-	ms	-
Response delay*3		t_{det}	-	-	350	μs	Figure 2.73, Figure 2.74
Minimum VCC down time		t_{VOFF}	450	-	-	μs	Figure 2.73, VCC = 1.0 V or above
Power-on reset enable time		$t_{W (POR)}$	1	-	-	ms	Figure 2.74, VCC = below 1.0 V
LVD operation stabilization time (after LVD is enabled)		$T_{d (E-A)}$	-	-	300	μs	Figure 2.76, Figure 2.77
Hysteresis width (POR)		V_{PORH}	-	110	-	mV	-
Hysteresis width (LVD0, LVD1 and LVD2)		V_{LVH}	-	60	-	mV	LVD0 selected
			-	100	-	mV	V_{det1_0} to V_{det1_2} selected.
			-	60	-		V_{det1_3} to V_{det1_9} selected.
			-	50	-		V_{det1_A} or V_{det1_B} selected.
			-	40	-		V_{det1_C} or V_{det1_F} selected.
			-	60	-		LVD2 selected

Note 1. When OFS1.LVDAS = 0.
Note 2. When OFS1.LVDAS = 1.
Note 3. The minimum VCC down time indicates the time when VCC is below the minimum value of voltage detection levels V_{POR}, V_{det0}, V_{det1}, and V_{det2} for the POR/LVD.

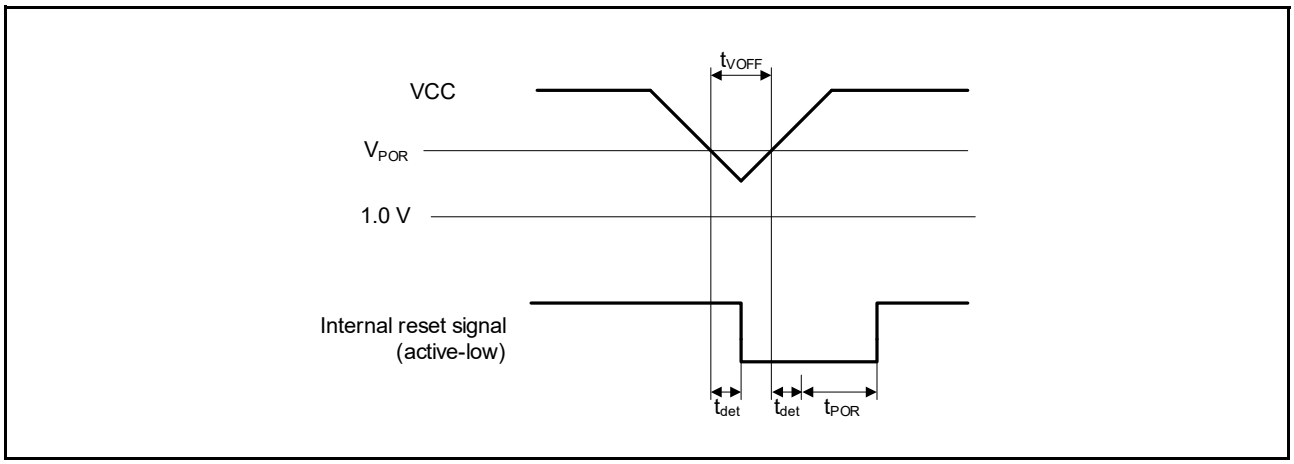

Figure 2.73 Voltage detection reset timing

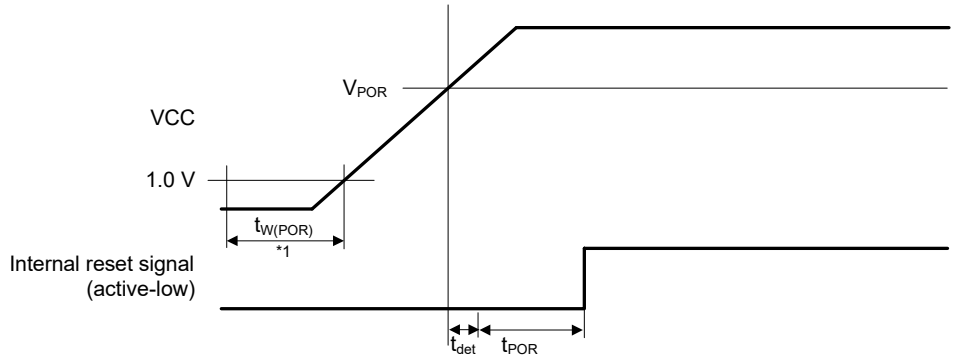

Note: $t_{W(POR)}$ is the time required for a power-on reset to be enabled while the external power VCC is being held below the valid voltage (1.0 V).
When VCC turns on, maintain $t_{W(POR)}$ for 1.0 ms or more.

Figure 2.74 Power-on reset timing

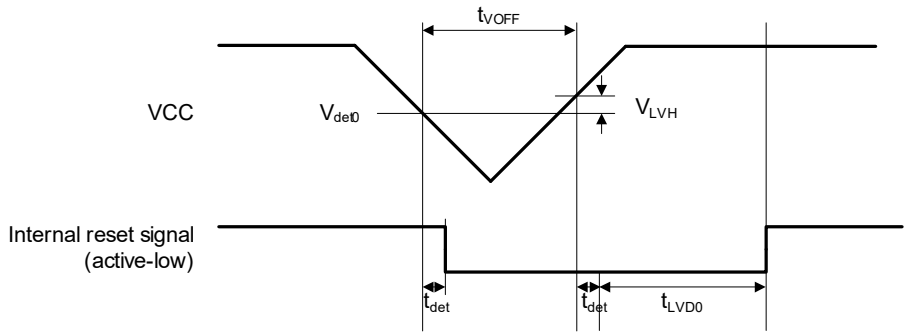

Figure 2.75 Voltage detection circuit timing (V_{det0})

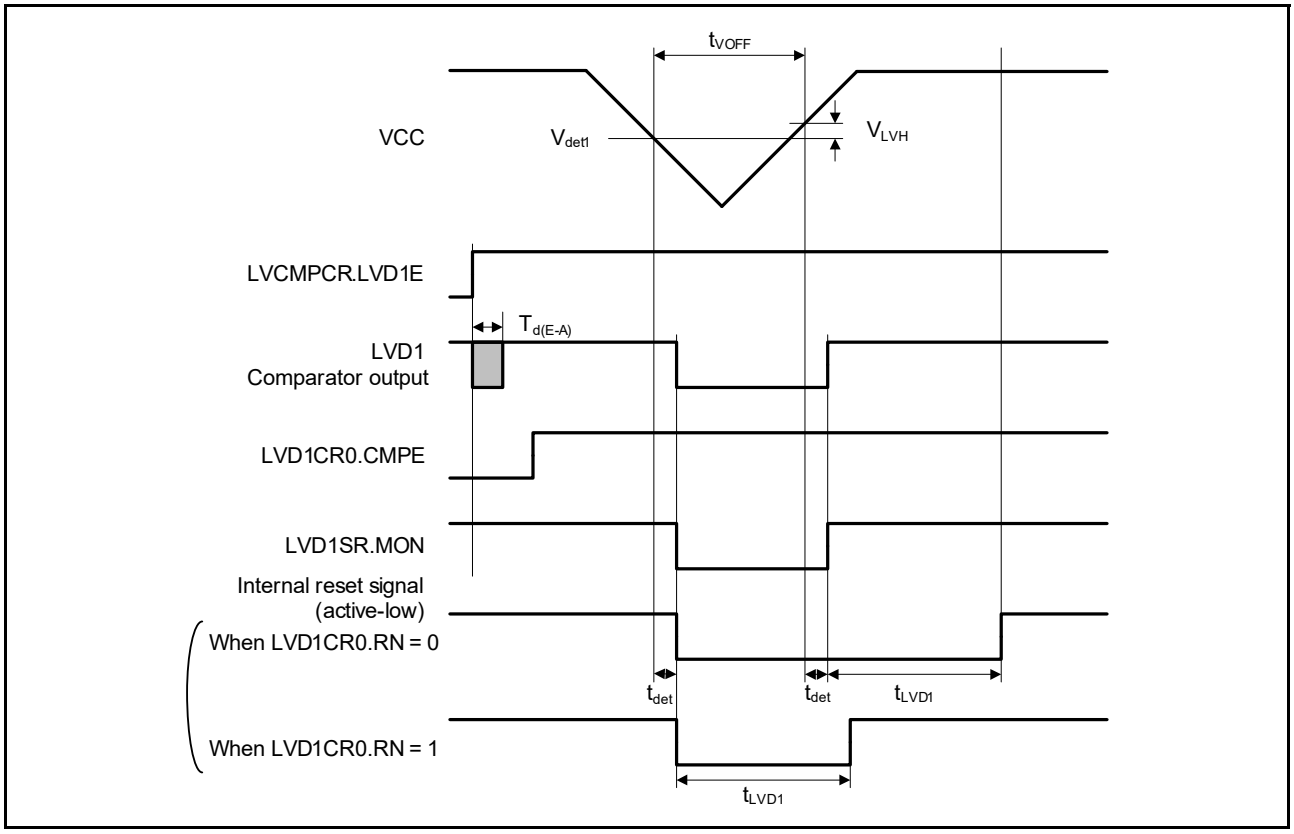

Figure 2.76 Voltage detection circuit timing (V_{det1})

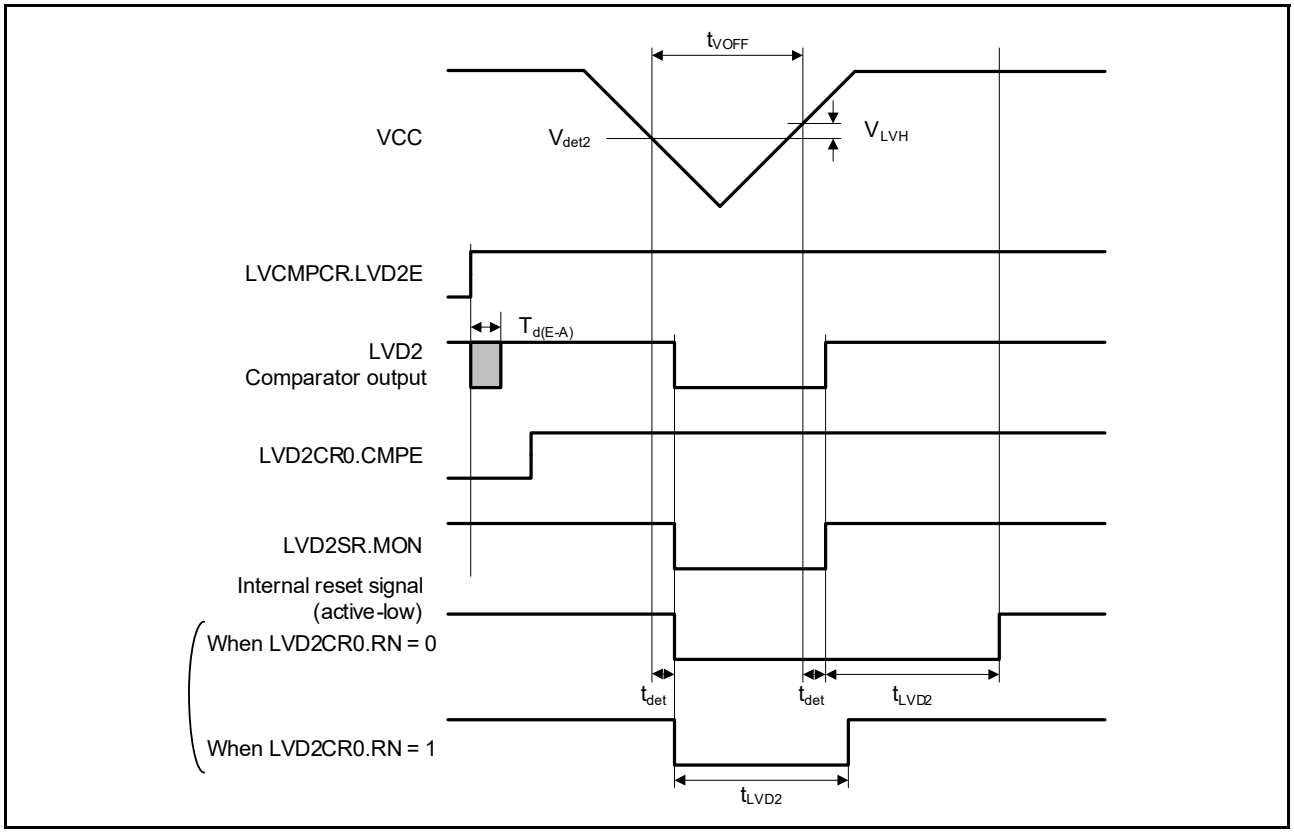

Figure 2.77 Voltage detection circuit timing (V_{det2})

2.10 VBATT Characteristics

Table 2.58 Battery backup function characteristics
Conditions: VCC = AVCC0 = 1.6V to 5.5V, VBATT = 1.6 to 3.6 V

Parameter		Symbol	Min	Typ	Max	Unit	Test conditions
Voltage level for switching to battery backup (falling)		$V_{DETBATT}$	1.99	2.09	2.19	V	Figure 2.78, Figure 2.79
Hysteresis width for switching to battery back up		V_{VBATTH}	-	100	-	mV	
VCC-off period for starting power supply switching		$t_{VOFFBATT}$	300	-	-	μs	-
Voltage detection level VBATT_Power-on reset (VBATT_POR)		$V_{VBATPOR}$	1.30	1.40	1.50	V	Figure 2.78, Figure 2.79
Wait time after VBATT_POR reset time cancellation		$t_{VBATPOR}$	-	-	3	mS	-
Level for detection of voltage drop on the VBATT pin (falling)	VBTLVDLVL[1:0] = 10b	$V_{DETBATLVD}$	2.11	2.2	2.29	V	Figure 2.80
	VBTLVDLVL[1:0] = 11b		1.92	2	2.08	V	
Hysteresis width for VBATT pin LVD		$V_{VBATLVDTH}$	-	50	-	mV	
VBATT pin LVD operation stabilization time		t_{d_vbat}	-	-	300	μs	Figure 2.80
VBATT pin LVD response delay time		t_{det_vbat}	-	-	350	μs	
Allowable voltage change rising/falling gradient		dt/dVCC	1.0	-	-	ms/V	-
VCC voltage level for access to the VBATT backup registers		$V_{_BKBATT}$	1.8	-	-	V	-

Note: The VCC-off period for starting power supply switching indicates the period in which VCC is below the minimum value of the voltage level for switching to battery backup ($V_{DETBATT}$).

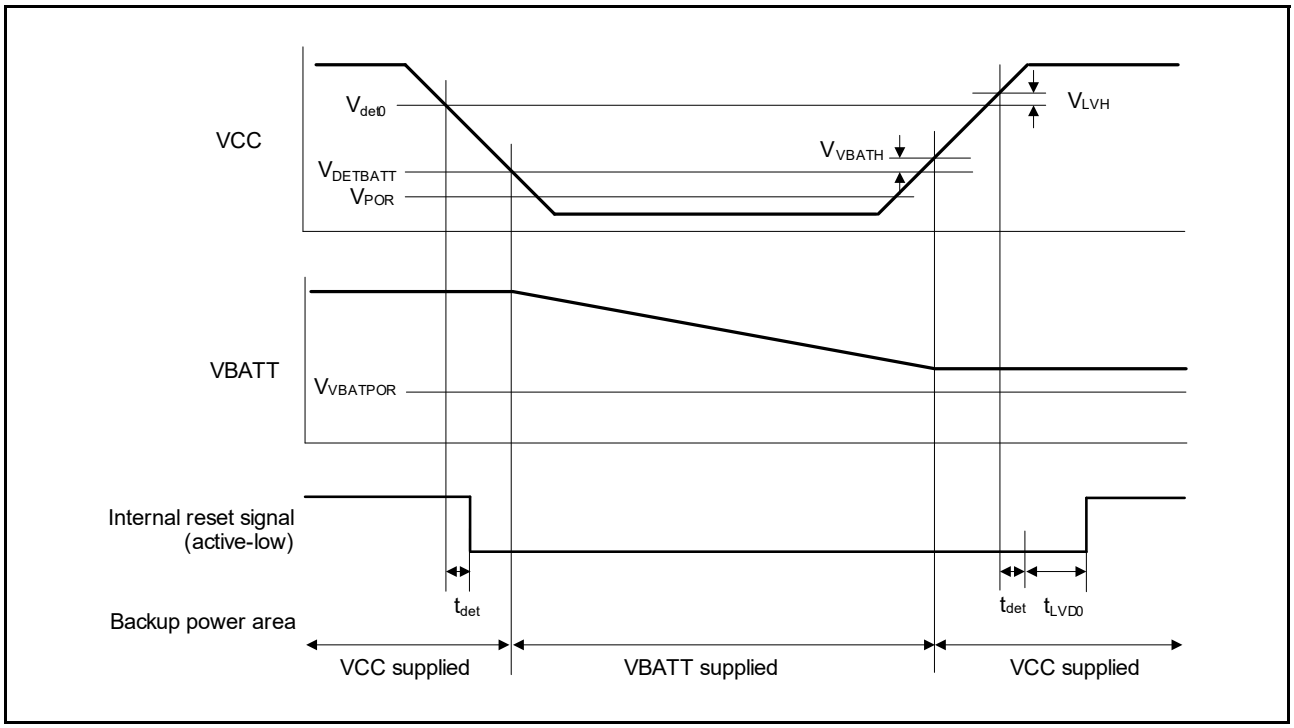

Figure 2.78 Power supply switching and LVD0 reset timing

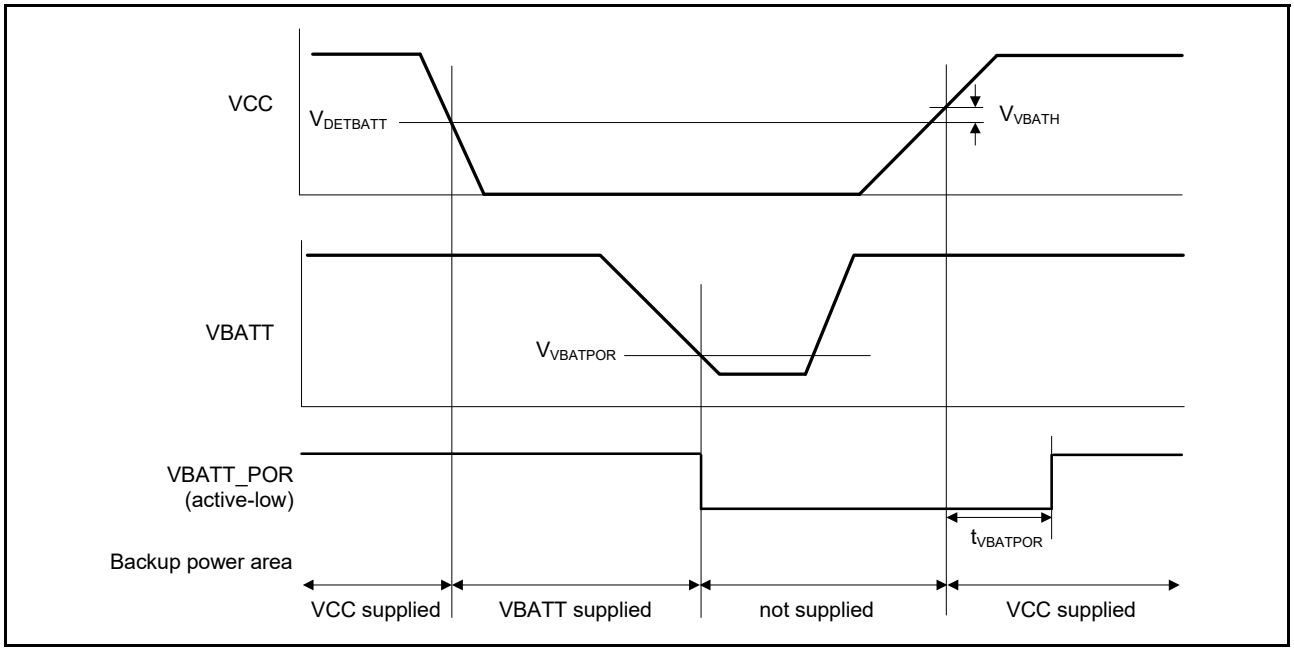

Figure 2.79 VBATT_POR reset timing

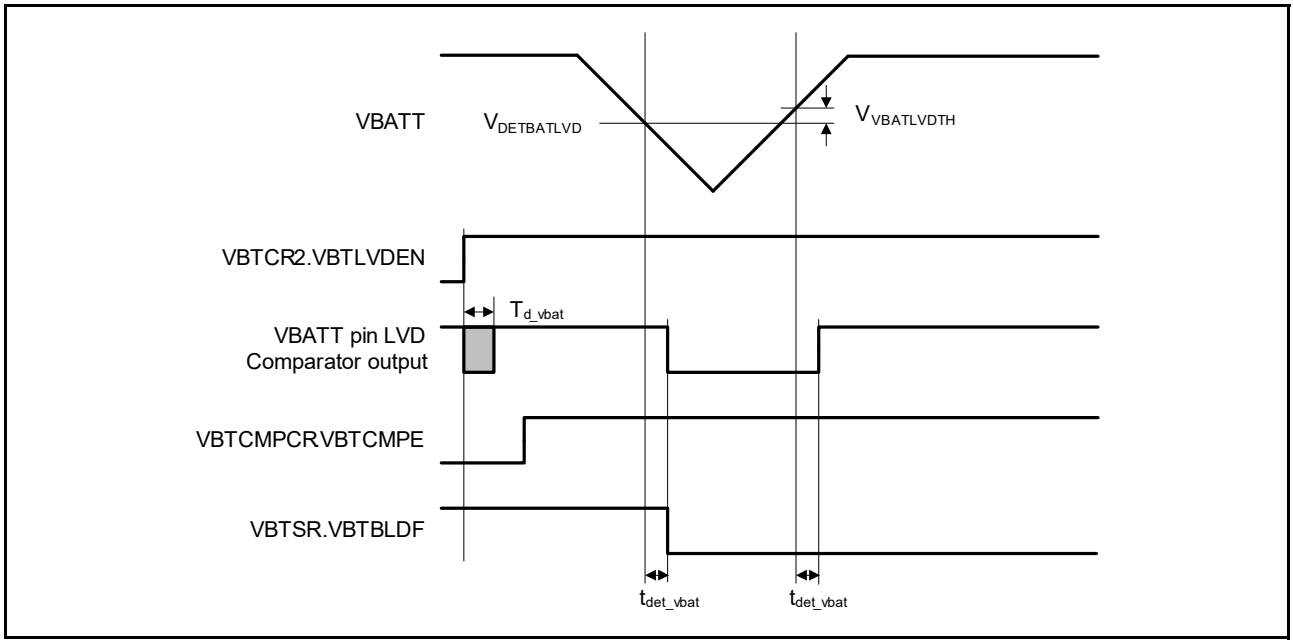

Figure 2.80 VBATT pin voltage detection circuit timing

Table 2.59 VBATT-I/O characteristics

Parameter			Symbol	Min	Typ	Max	Unit	Test conditions
VBATWIOn I/O output characteristics (n = 0 to 2)	VCC > $V_{DETBATT}$	VCC = 4.0 to 5.5 V	V_{OH}	VCC - 0.8	-	-	V	I_{OH} = -200 μA
			V_{OL}	-	-	0.8		I_{OL} = 200 μA
		VCC = 2.7 to 4.0 V	V_{OH}	VCC - 0.5	-	-		I_{OH} = -100 μA
			V_{OL}	-	-	0.5		I_{OL} = 100 μA
		VCC = $V_{DETBATT}$ to 2.7 V	V_{OH}	VCC - 0.3	-	-		I_{OH} = -50 μA
			V_{OL}	-	-	0.3		I_{OL} = 50 μA
	VCC < $V_{DETBATT}$	VBATT = 2.7 to 3.6 V	V_{OH}	V_{BATT} - 0.5	-	-		I_{OH} = -100 μA
			V_{OL}	-	-	0.5		I_{OL} = 100 μA
		VBATT = 1.6 to 2.7 V	V_{OH}	V_{BATT} - 0.3	-	-		I_{OH} = -50 μA
			V_{OL}	-	-	0.3		I_{OL} = 50 μA

2.11 CTSU Characteristics

Table 2.60 CTSU characteristics

Conditions: VCC = AVCC0 = 1.8 to 5.5 V

Parameter	Symbol	Min	Typ	Max	Unit	Test conditions
External capacitance connected to TSCAP pin	C_{tscap}	9	10	11	nF	-
TS pin capacitive load	C_{base}	-	-	50	pF	-
Permissible output high current	ΣIoH	-	-	-24	mA	When the mutual capacitance method is applied

2.12 Segment LCD Controller Characteristics

2.12.1 Resistance Division Method

[Static Display Mode]

Table 2.61 Resistance division method LCD characteristics (1)
Conditions: VL4 ≤ VCC ≤ 5.5 V

Parameter	Symbol	Min	Typ	Max	Unit	Test conditions
LCD drive voltage	V_{L4}	2.0	-	VCC	V	-

[1/2 Bias Method, 1/4 Bias Method]

Table 2.62 Resistance division method LCD characteristics (2)
Conditions: VL4 ≤ VCC ≤ 5.5 V

Parameter	Symbol	Min	Typ	Max	Unit	Test conditions
LCD drive voltage	V_{L4}	2.7	-	VCC	V	-

[1/3 Bias Method]

Table 2.63 Resistance division method LCD characteristics (3)
Conditions: VL4 ≤ VCC ≤ 5.5 V

Parameter	Symbol	Min	Typ	Max	Unit	Test conditions
LCD drive voltage	V_{L4}	2.5	-	VCC	V	-

2.12.2 Internal Voltage Boosting Method

[1/3 Bias Method]

Table 2.64 Internal voltage boosting method LCD characteristics
Conditions: VCC = 1.8 V to 5.5 V

Parameter	Symbol	Conditions		Min	Typ	Max	Unit	Test conditions
LCD output voltage variation range	V_{L1}	C1 to C4*1 = 0.47 μF	VLCD = 04h	0.90	1.0	1.08	V	-
			VLCD = 05h	0.95	1.05	1.13	V	-
			VLCD = 06h	1.00	1.10	1.18	V	-
			VLCD = 07h	1.05	1.15	1.23	V	-
			VLCD = 08h	1.10	1.20	1.28	V	-
			VLCD = 09h	1.15	1.25	1.33	V	-
			VLCD = 0Ah	1.20	1.30	1.38	V	-
			VLCD = 0Bh	1.25	1.35	1.43	V	-
			VLCD = 0Ch	1.30	1.40	1.48	V	-
			VLCD = 0Dh	1.35	1.45	1.53	V	-
			VLCD = 0Eh	1.40	1.50	1.58	V	-
			VLCD = 0Fh	1.45	1.55	1.63	V	-
			VLCD = 10h	1.50	1.60	1.68	V	-
			VLCD = 11h	1.55	1.65	1.73	V	-
			VLCD = 12h	1.60	1.70	1.78	V	-
			VLCD = 13h	1.65	1.75	1.83	V	-
Doubler output voltage	V_{L2}	C1 to C4*1 = 0.47 μF		$2 \times V_{L1} - 0.1$	$2 \times V_{L1}$	$2 \times V_{L1}$	V	-
Tripler output voltage	V_{L4}	C1 to C4*1 = 0.47 μF		$3 \times V_{L1} - 0.15$	$3 \times V_{L1}$	$3 \times V_{L1}$	V	-
Reference voltage setup time*2	t_{VL1S}			5	-	-	ms	Figure 2.81
LCD output voltage variation range*3	t_{VLWT}	C1 to C4*1 = 0.47 μF		500	-	-	ms	

Note 1. This is a capacitor that is connected between voltage pins used to drive the LCD.

C1: A capacitor connected between CAPH and CAPL
C2: A capacitor connected between VL1 and GND
C3: A capacitor connected between VL2 and GND
C4: A capacitor connected between VL4 and GND
C1 = C2 = C3 = C4 = 0.47 μF ±30%.

Note 2. This is the time required to wait from when the reference voltage is specified using the VLCD register (or when the internal voltage boosting method is selected (by setting the MDSET[1:0] bits in the LCDM0 register to 01b) if the default value reference voltage is used) until voltage boosting starts (VLCON = 1).

Note 3. This is the wait time from when voltage boosting is started (VLCON = 1) until display is enabled (LCDON = 1).

[1/4 Bias Method]

Table 2.65 Internal voltage boosting method LCD characteristics

Conditions: VCC = 1.8 V to 5.5 V

Parameter	Symbol	Conditions		Min	Typ	Max	Unit	Test conditions
LCD output voltage variation range	V_{L1}	C1 to C5*1 = 0.47 μF	VLCD = 04h	0.90	1.0	1.08	V	-
			VLCD = 05h	0.95	1.05	1.13	V	-
			VLCD = 06h	1.00	1.10	1.18	V	-
			VLCD = 07h	1.05	1.15	1.23	V	-
			VLCD = 08h	1.10	1.20	1.28	V	-
			VLCD = 09h	1.15	1.25	1.33	V	-
			VLCD = 0Ah	1.20	1.30	1.38	V	-
			VLCD = 0Bh	1.25	1.35	1.43	V	-
			VLCD = 0Ch	1.30	1.40	1.48	V	-
Doubler output voltage	V_{L2}	C1 to C5*1 = 0.47 μF		$2V_{L1}$ - 0.08	$2V_{L1}$	$2V_{L1}$	V	-
Tripler output voltage	V_{L3}	C1 to C5*1 = 0.47 μF		$3V_{L1}$ - 0.12	$3V_{L1}$	$3V_{L1}$	V	-
Quadruply output voltage	V_{L4}*4	C1 to C5*1 = 0.47 μF		$4V_{L1}$ - 0.16	$4V_{L1}$	$4V_{L1}$	V	-
Reference voltage setup time*2	t_{VL1S}			5	-	-	ms	Figure 2.81
LCD output voltage variation range*3	t_{VLWT}	C1 to C5*1 = 0.47 μF		500	-	-	ms	

Note 1. This is a capacitor that is connected between voltage pins used to drive the LCD.
C1: A capacitor connected between CAPH and CAPL
C2: A capacitor connected between V_{L1} and GND
C3: A capacitor connected between V_{L2} and GND
C4: A capacitor connected between V_{L3} and GND
C5: A capacitor connected between V_{L4} and GND
C1 = C2 = C3 = C4 = C5 = 0.47 μF ± 30%

Note 2. This is the time required to wait from when the reference voltage is specified by using the VLCD register (or when the internal voltage boosting method is selected (by setting the MDSET1 and MDSET0 bits in the LCDM0 register to 01b) if the default value reference voltage is used) until voltage boosting starts (VLCON = 1).

Note 3. This is the wait time from when voltage boosting is started (VLCON = 1) until display is enabled (LCDON = 1).

Note 4. V_{L4} must be 5.5 V or lower.

2.12.3 Capacitor Split Method

[1/3 Bias Method]

Table 2.66 Internal voltage boosting method LCD characteristics

Conditions: VCC = 2.2 V to 5.5 V

Parameter	Symbol	Conditions	Min	Typ	Max	Unit	Test conditions
VL4 voltage*1	V_{L4}	C1 to C4 = 0.47 μF*2	-	VCC	-	V	-
VL2 voltage*1	V_{L2}	C1 to C4 = 0.47 μF*2	2/3 × V_{L4} - 0.07	2/3 × V_{L4}	2/3 × V_{L4} + 0.07	V	-
VL1 voltage*1	V_{L1}	C1 to C4 = 0.47 μF*2	1/3 × V_{L4} - 0.08	1/3 × V_{L4}	1/3 × V_{L4} + 0.08	V	-
Capacitor split wait time*1	t_{WAIT}		100	-	-	ms	Figure 2.81

Note 1. This is the wait time from when voltage bucking is started (VLCON = 1) until display is enabled (LCDON = 1).

Note 2. This is a capacitor that is connected between voltage pins used to drive the LCD.
C1: A capacitor connected between CAPH and CAPL
C2: A capacitor connected between V_{L1} and GND
C3: A capacitor connected between V_{L2} and GND
C4: A capacitor connected between V_{L4} and GND
C1 = C2 = C3 = C4 = 0.47 μF ± 30%.

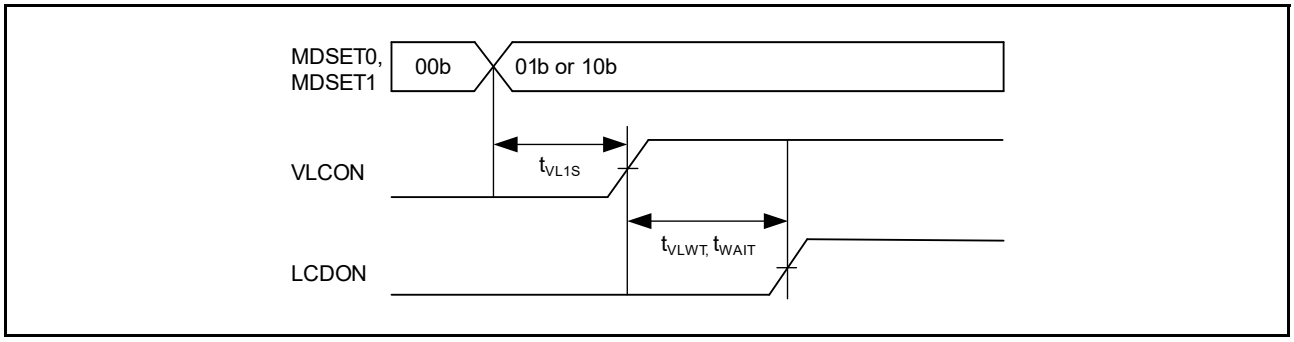

Figure 2.81 LCD reference voltage setup time, voltage boosting wait time, and capacitor split wait time

2.13 Comparator Characteristics

Table 2.67 ACMPLP characteristics

Conditions: VCC = 1.8 to 5.5 V

Parameter			Symbol	Min	Typ	Max	Unit	Test conditions
Reference voltage range	Standard mode	IVREFn (n= 0,1)	VREF	0	-	VCC-1.4	V	-
	Window mode*2	IVREF1	VREFH	1.4	-	VCC	V	-
		IVREF0	VREFL	0	-	VCC-1.4	V	-
Input voltage range			VI	0	-	VCC	V	-
Internal reference voltage			-	1.36	1.44	1.50	V	-
Output delay	High-speed mode		Td	-	-	1.2	μs	VCC = 3.0 Slew rate of input signal > 50 mV/μs
	Low-speed mode			-	-	5	μs	
	Window mode			-	-	2	μs	
Offset voltage*1	High-speed mode		-	-	-	50	mV	-
	Low-speed mode		-	-	-	40	mV	-
	Window mode		-	-	-	60	mV	-
Operation stabilization wait time			T_{cmp}	100	-	-	μs	-

Note 1. When 8-bit DAC output is used as the reference voltage, the offset voltage increases up to 2.5 x VCC/256.
Note 2. In window mode, be sure to satisfy the following condition: IVREF1 - IVREF0 ≥ 0.2 V.

2.14 OPAMP Characteristics

Table 2.68 OPAMP characteristics

Conditions: VCC = AVCC0 = 1.8 to 5.5 V (AVCC0 = VCC when VCC < 2.0 V)

Parameter	Symbol	Conditions		Min	Typ	Max	Unit
Common mode input range	Vicm1	Low power mode		0.2	-	AVCC0 - 0.5	V
	Vicm2	High-speed mode		0.3	-	AVCC0 - 0.6	V
Output voltage range	Vo1	Low power mode		0.1	-	AVCC0 - 0.1	V
	Vo2	High-speed mode		0.1	-	AVCC0 - 0.1	V
Input offset voltage	Vioff	3σ		-10	-	10	mV
Open gain	Av			60	120	-	dB
Gain-bandwidth (GB) product	GBW1	Low power mode		-	0.04	-	MHz
	GBW2	High-speed mode		-	1.7	-	MHz
Phase margin	PM	CL = 20 pF		50	-	-	deg
Gain margin	GM	CL = 20 pF		10	-	-	dB
Equivalent input noise	Vnoise1	f = 1 kHz	Low power mode	-	230	-	nV/√Hz
	Vnoise2	f = 10 kHz		-	200	-	nV/√Hz
	Vnoise3	f = 1 kHz	High-speed mode	-	90	-	nV/√Hz
	Vnoise4	f = 2 kHz		-	70	-	nV/√Hz
Power supply reduction ratio	PSRR			-	90	-	dB
Common mode signal reduction ratio	CMRR			-	90	-	dB
Stabilization wait time	Tstd1	CL = 20 pF Only operational amplifier is activated *1	Low power mode	650	-	-	μs
	Tstd2		High-speed mode	13	-	-	μs
	Tstd3	CL = 20 pF Operational amplifier and reference current circuit are activated simultaneously	Low power mode	650	-	-	μs
	Tstd4		High-speed mode	13	-	-	μs
Settling time	Tset1	CL = 20 pF	Low power mode	-	-	750	μs
	Tset2		High-speed mode	-	-	13	μs
Slew rate	Tslew1	CL = 20 pF	Low power mode	-	0.02	-	V/μs
	Tslew2		High-speed mode	-	1.1	-	V/μs
Load current	Iload1	Low-power mode		-100	-	100	μA
	Iload2	High-speed mode		-100	-	100	μA
Load capacitance	CL			-	-	20	pF

Note 1. When the operational amplifier reference current circuit is activated in advance.

2.15 Flash Memory Characteristics

2.15.1 Code Flash Memory Characteristics

Table 2.69 Code flash characteristics (1)

Parameter		Symbol	Min	Typ	Max	Unit	Test conditions
Reprogramming/erasure cycle*1		N_{PEC}	1000	-	-	Times	-
Data hold time	After 1000 times of N_{PEC}	t_{DRP}	20*2, *3	-	-	Year	T_a = +85°C

Note 1. The reprogram/erase cycle is the number of erasures for each block. When the reprogram/erase cycle is n times (n = 1,000), erasing can be done n times for each block. For instance, when 8-byte programming is performed 256 times for different addresses in 2-KB blocks, and then the entire block is erased, the reprogram/erase cycle is counted as one. However, programming the same address for several times as one erasure is not enabled (overwriting is prohibited).
Note 2. Characteristic when using the flash memory programmer and the self-programming library provided by Renesas Electronics.
Note 3. This result is obtained from reliability testing.

Table 2.70 Code flash characteristics (2)
High-speed operating mode
Conditions: VCC = 2.7 to 5.5 V

Parameter		Symbol	FCLK = 1 MHz			FCLK = 32 MHz			Unit
			Min	Typ	Max	Min	Typ	Max	
Programming time	8-byte	t_{P8}	-	116	998	-	54	506	μs
Erasure time	2-KB	t_{E2K}	-	9.03	287	-	5.67	222	ms
Blank check time	8-byte	t_{BC8}	-	-	56.8	-	-	16.6	μs
	2-KB	t_{BC2K}	-	-	1899	-	-	140	μs
Erase suspended time		t_{SED}	-	-	22.5	-	-	10.7	μs
Startup area switching setting time		t_{SAS}	-	21.7	585	-	12.1	447	ms
Access window time		t_{AWS}	-	21.7	585	-	12.1	447	ms
OCD/serial programmer ID setting time		t_{OSIS}	-	21.7	585	-	12.1	447	ms
Flash memory mode transition wait time 1		t_{DIS}	2	-	-	2	-	-	μs
Flash memory mode transition wait time 2		t_{MS}	5	-	-	5	-	-	μs

Note: Does not include the time until each operation of the flash memory is started after instructions are executed by software.
Note: The lower-limit frequency of FCLK is 1 MHz during programming or erasing the flash memory. When using FCLK at below 4 MHz, the frequency can be set to 1 MHz, 2 MHz, or 3 MHz. A non-integer frequency such as 1.5 MHz cannot be set.
Note: The frequency accuracy of FCLK must be ±3.5%. Confirm the frequency accuracy of the clock source.

Table 2.71 Code flash characteristics (3)
Middle-speed operating mode
Conditions: VCC = 1.8 to 5.5 V, T_a = -40 to +85°C

Parameter		Symbol	FCLK = 1 MHz			FCLK = 8 MHz			Unit
			Min	Typ	Max	Min	Typ	Max	
Programming time	8-byte	t_{P8}	-	157	1411	-	101	966	μs
Erasure time	2-KB	t_{E2K}	-	9.10	289	-	6.10	228	ms
Blank check time	8-byte	t_{BC8}	-	-	87.7	-	-	52.5	μs
	2-KB	t_{BC2K}	-	-	1930	-	-	414	μs
Erase suspended time		t_{SED}	-	-	32.7	-	-	21.6	μs
Startup area switching setting time		t_{SAS}	-	22.5	592	-	14.0	464	ms
Access window time		t_{AWS}	-	22.5	592	-	14.0	464	ms
OCD/serial programmer ID setting time		t_{OSIS}	-	22.5	592	-	14.0	464	ms
Flash memory mode transition wait time 1		t_{DIS}	2	-	-	2	-	-	μs
Flash memory mode transition wait time 2		t_{MS}	720	-	-	720	-	-	ns

Note: Does not include the time until each operation of the flash memory is started after instructions are executed by software.
Note: The lower-limit frequency of FCLK is 1 MHz during programming or erasing the flash memory. When using FCLK at below 4 MHz, the frequency can be set to 1 MHz, 2 MHz, or 3 MHz. A non-integer frequency such as 1.5 MHz cannot be set.
Note: The frequency accuracy of FCLK must be ±3.5%. Confirm the frequency accuracy of the clock source.

2.15.2 Data Flash Memory Characteristics

Table 2.72 Data flash characteristics (1)

Parameter		Symbol	Min	Typ	Max	Unit	Test conditions
Reprogramming/erasure cycle*1		N_{DPEC}	100000	1000000	-	Times	-
Data hold time	After 10000 times of N_{DPEC}	t_{DDRP}	20*2, *3	-	-	Year	T_a = +85°C
	After 100000 times of N_{DPEC}		5*2, *3	-	-	Year	
	After 1000000 times of N_{DPEC}		-	1*2, *3	-	Year	T_a = +25°C

Note 1. The reprogram/erase cycle is the number of erasure for each block. When the reprogram/erase cycle is n times (n = 100000), erasing can be performed n times for each block. For instance, when 1-byte programming is performed 1000 times for different addresses in 1-byte blocks, and then the entire block is erased, the reprogram/erase cycle is counted as one. However, programming the same address for several times as one erasure is not enabled. Overwriting is prohibited.
Note 2. Characteristics when using the flash memory programmer and the self-programming library provided by Renesas Electronics.
Note 3. These results are obtained from reliability testing.

Table 2.73 Data flash characteristics (2)
High-speed operating mode
Conditions: VCC = 2.7 to 5.5 V

Parameter		Symbol	FCLK = 4 MHz			FCLK = 32 MHz			Unit
			Min	Typ	Max	Min	Typ	Max	
Programming time	1-byte	t_{DP1}	-	52.4	463	-	42.1	387	μs
Erasure time	1-KB	t_{DE1K}	-	8.98	286	-	6.42	237	ms
Blank check time	1-byte	t_{DBC1}	-	-	24.3	-	-	16.6	μs
	1-KB	t_{DBC1K}	-	-	1872	-	-	512	μs
Suspended time during erasing		t_{DSED}	-	-	13.0	-	-	10.7	μs
Data flash STOP recovery time		t_{DSTOP}	5	-	-	5	-	-	μs

Note: Does not include the time until each operation of the flash memory is started after instructions are executed by software.
Note: The lower-limit frequency of FCLK is 1 MHz during programming or erasing the flash memory. When using FCLK at below 4 MHz, the frequency can be set to 1 MHz, 2 MHz, or 3 MHz. A non-integer frequency such as 1.5 MHz cannot be set.
Note: The frequency accuracy of FCLK must be ±3.5%. Confirm the frequency accuracy of the clock source.

Table 2.74 Data flash characteristics (3)
Middle-speed operating mode
Conditions: VCC = 1.8 to 5.5 V, T_a = -40 to +85°C

Parameter		Symbol	FCLK = 4 MHz			FCLK = 8 MHz			Unit
			Min	Typ	Max	Min	Typ	Max	
Programming time	1-byte	t_{DP1}	-	94.7	886	-	89.3	849	μs
Erasure time	1-KB	t_{DE1K}	-	9.59	299	-	8.29	273	ms
Blank check time	1-byte	t_{DBC1}	-	-	56.2	-	-	52.5	μs
	1-KB	t_{DBC1K}	-	-	2.17	-	-	1.51	ms
Suspended time during erasing		t_{DSED}	-	-	23.0	-	-	21.7	μs
Data flash STOP recovery time		t_{DSTOP}	720	-	-	720	-	-	ns

Note: Does not include the time until each operation of the flash memory is started after instructions are executed by software.
Note: The lower-limit frequency of FCLK is 1 MHz during programming or erasing the flash memory. When using FCLK at below 4 MHz, the frequency can be set to 1 MHz, 2 MHz, or 3 MHz. A non-integer frequency such as 1.5 MHz cannot be set.
Note: The frequency accuracy of FCLK must be ±3.5%. Confirm the frequency accuracy of the clock source.

2.16 Boundary Scan

Table 2.75 Boundary scan
Conditions: VCC = AVCC0 = 2.4 to 5.5 V

Parameter	Symbol	Min	Typ	Max	Unit	Test conditions
TCK clock cycle time	t_{TCKcyc}	100	-	-	ns	Figure 2.82
TCK clock high pulse width	t_{TCKH}	45	-	-	ns	
TCK clock low pulse width	t_{TCKL}	45	-	-	ns	
TCK clock rise time	t_{TCKr}	-	-	5	ns	
TCK clock fall time	t_{TCKf}	-	-	5	ns	
TMS setup time	t_{TMSS}	20	-	-	ns	Figure 2.83
TMS hold time	t_{TMSH}	20	-	-	ns	
TDI setup time	t_{TDIS}	20	-	-	ns	
TDI hold time	t_{TDIH}	20	-	-	ns	
TDO data delay	t_{TDOD}	-	-	70	ns	
Boundary Scan circuit start up time*1	t_{BSSTUP}	t_{RESWP}	-	-	-	Figure 2.84

Note 1. Boundary scan does not function until power-on-reset becomes negative.

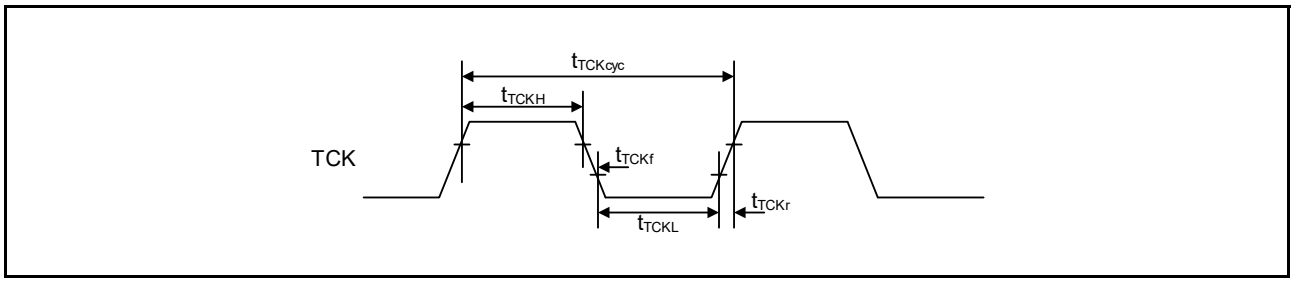

Figure 2.82 Boundary scan TCK timing

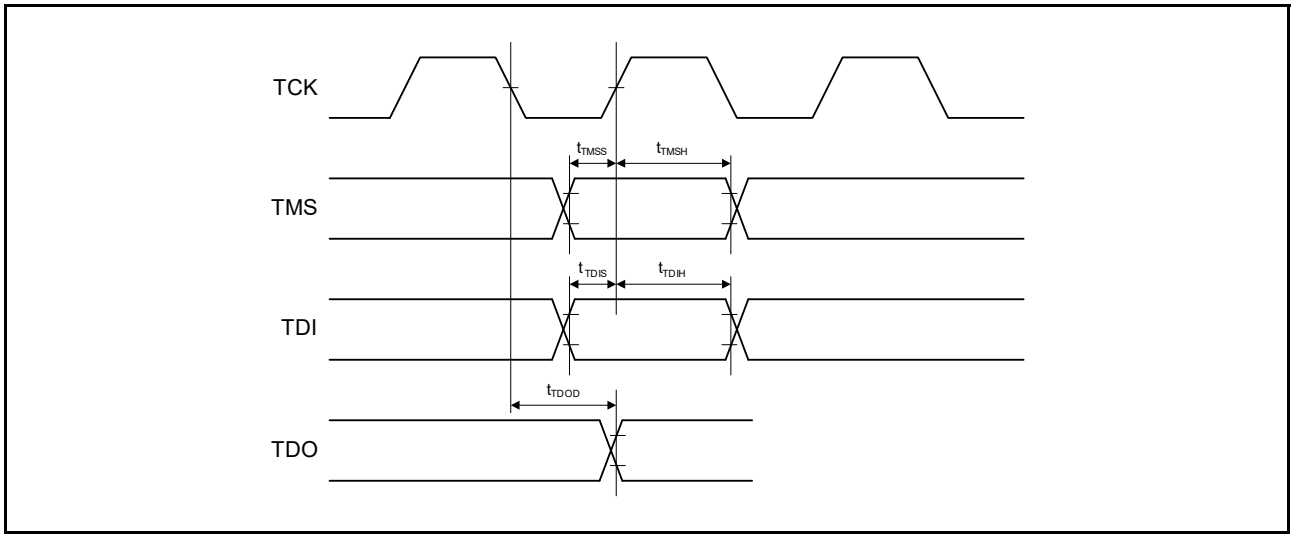

Figure 2.83 Boundary scan input/output timing

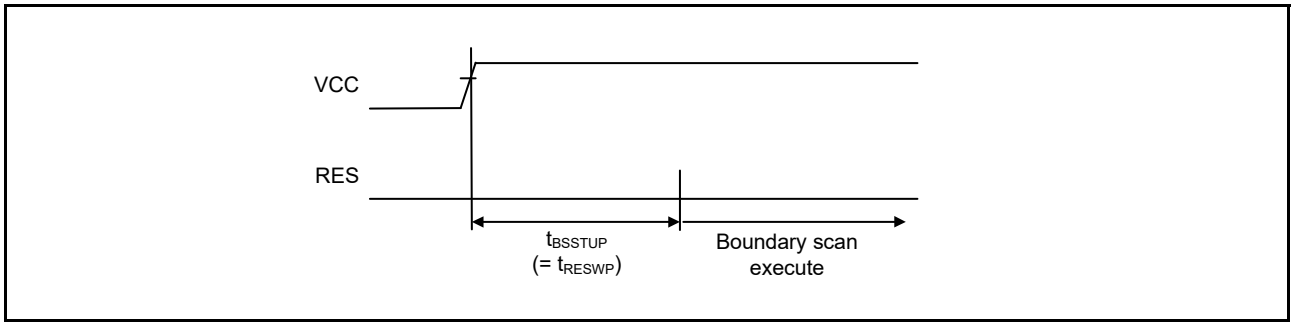

Figure 2.84 Boundary scan circuit start up timing

2.17 Joint Test Action Group (JTAG)

Table 2.76 JTAG (debug) characteristics (1)
Conditions: VCC = 2.4 to 5.5 V

Parameter	Symbol	Min	Typ	Max	Unit	Test conditions
TCK clock cycle time	t_{TCKcyc}	80	-	-	ns	Figure 2.85
TCK clock high pulse width	t_{TCKH}	35	-	-	ns	
TCK clock low pulse width	t_{TCKL}	35	-	-	ns	
TCK clock rise time	t_{TCKr}	-	-	5	ns	
TCK clock fall time	t_{TCKf}	-	-	5	ns	
TMS setup time	t_{TMSS}	16	-	-	ns	Figure 2.86
TMS hold time	t_{TMSH}	16	-	-	ns	
TDI setup time	t_{TDIS}	16	-	-	ns	
TDI hold time	t_{TDIH}	16	-	-	ns	
TDO data delay time	t_{TDOD}	-	-	70	ns	

Table 2.77 JTAG (debug) characteristics (2)
Conditions: VCC = 1.6 to 2.4 V

Parameter	Symbol	Min	Typ	Max	Unit	Test conditions
TCK clock cycle time	t_{TCKcyc}	250	-	-	ns	Figure 2.85
TCK clock high pulse width	t_{TCKH}	120	-	-	ns	
TCK clock low pulse width	t_{TCKL}	120	-	-	ns	
TCK clock rise time	t_{TCKr}	-	-	5	ns	
TCK clock fall time	t_{TCKf}	-	-	5	ns	
TMS setup time	t_{TMSS}	50	-	-	ns	Figure 2.86
TMS hold time	t_{TMSH}	50	-	-	ns	
TDI setup time	t_{TDIS}	50	-	-	ns	
TDI hold time	t_{TDIH}	50	-	-	ns	
TDO data delay time	t_{TDOD}	-	-	150	ns	

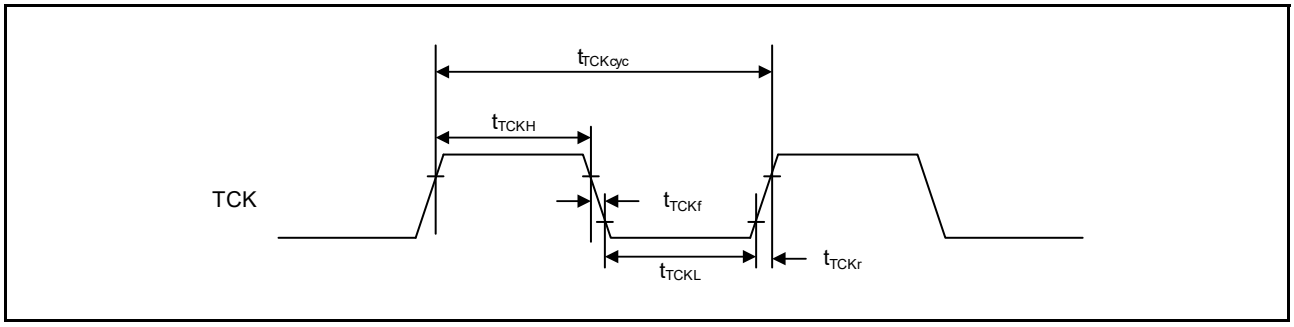

Figure 2.85 JTAG TCK timing

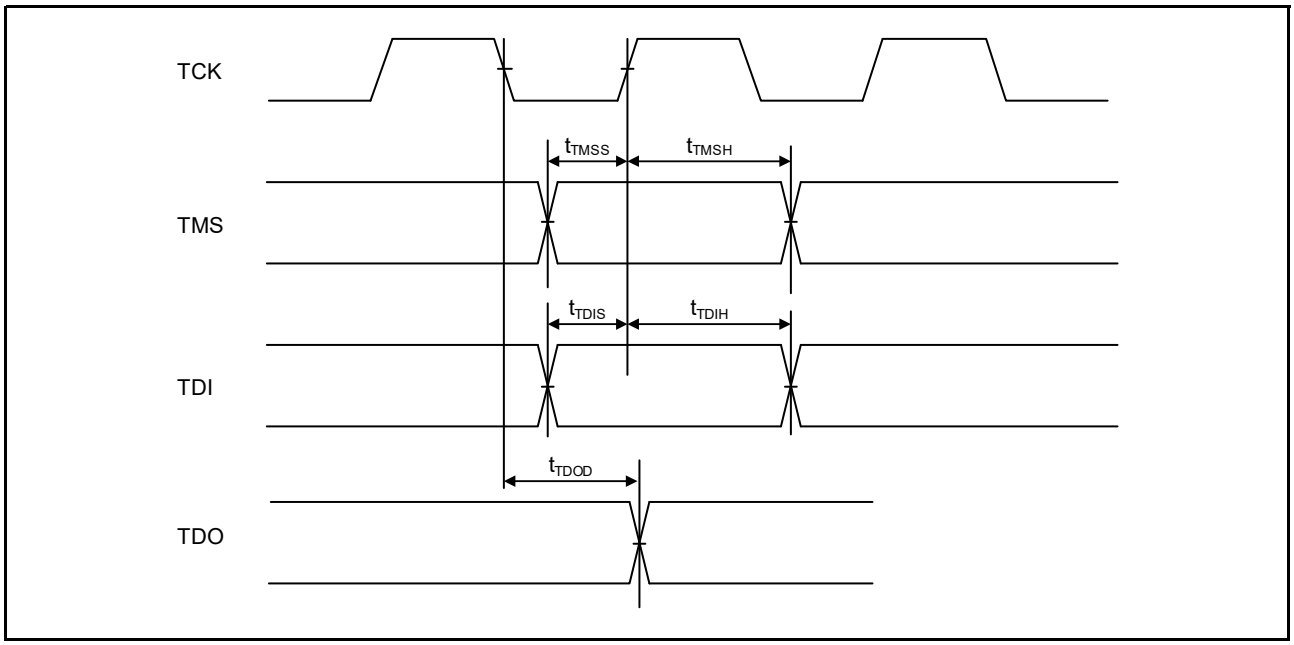

Figure 2.86 JTAG input/output timing

2.17.1 Serial Wire Debug (SWD)

Table 2.78 SWD characteristics (1)
Conditions: VCC = 2.4 to 5.5 V

Parameter	Symbol	Min	Typ	Max	Unit	Test conditions
SWCLK clock cycle time	$t_{SWCKcyc}$	80	-	-	ns	Figure 2.87
SWCLK clock high pulse width	t_{SWCKH}	35	-	-	ns	
SWCLK clock low pulse width	t_{SWCKL}	35	-	-	ns	
SWCLK clock rise time	t_{SWCKr}	-	-	5	ns	
SWCLK clock fall time	t_{SWCKf}	-	-	5	ns	
SWDIO setup time	t_{SWDS}	16	-	-	ns	Figure 2.88
SWDIO hold time	t_{SWDH}	16	-	-	ns	
SWDIO data delay time	t_{SWDD}	2	-	70	ns	

Table 2.79 SWD characteristics (2)
Conditions: VCC = 1.6 to 2.4 V

Parameter	Symbol	Min	Typ	Max	Unit	Test conditions
SWCLK clock cycle time	$t_{SWCKcyc}$	250	-	-	ns	Figure 2.87
SWCLK clock high pulse width	t_{SWCKH}	120	-	-	ns	
SWCLK clock low pulse width	t_{SWCKL}	120	-	-	ns	
SWCLK clock rise time	t_{SWCKr}	-	-	5	ns	
SWCLK clock fall time	t_{SWCKf}	-	-	5	ns	
SWDIO setup time	t_{SWDS}	50	-	-	ns	Figure 2.88
SWDIO hold time	t_{SWDH}	50	-	-	ns	
SWDIO data delay time	t_{SWDD}	2	-	150	ns	

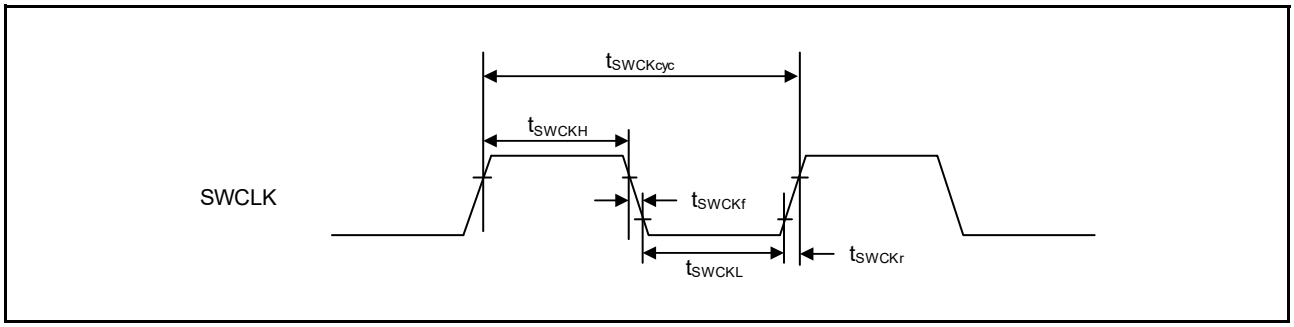

Figure 2.87 SWD SWCLK timing

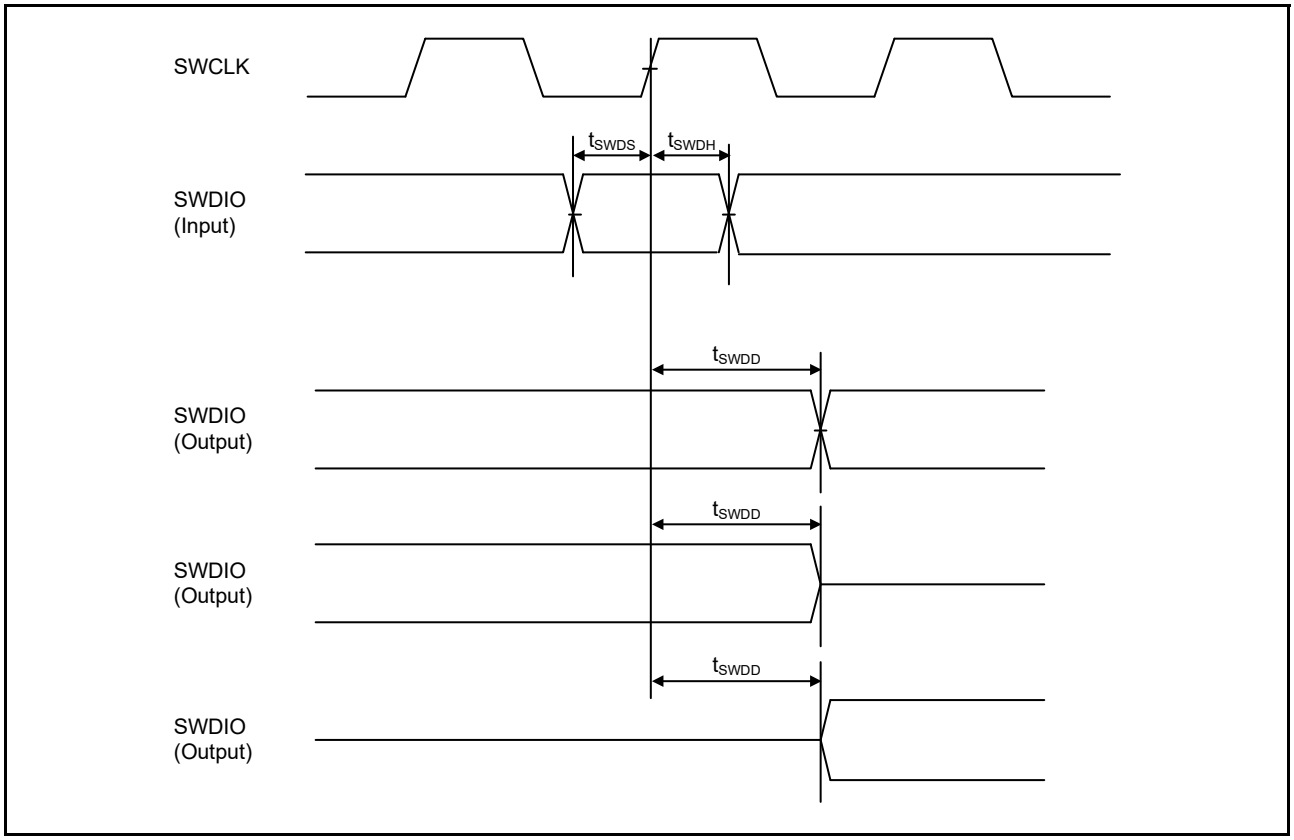

Figure 2.88 SWD input/output timing

Appendix 1.Package Dimensions

Information on the latest version of the package dimensions or mountings is shown in “Packages” on the Renesas Electronics Corporation website.

JEITA Package Code	RENESAS Code	Previous Code	MASS[Typ.]
P-TFLGA100-7x7-0.65	PTLG0100JA-A	100F0G	0.1g

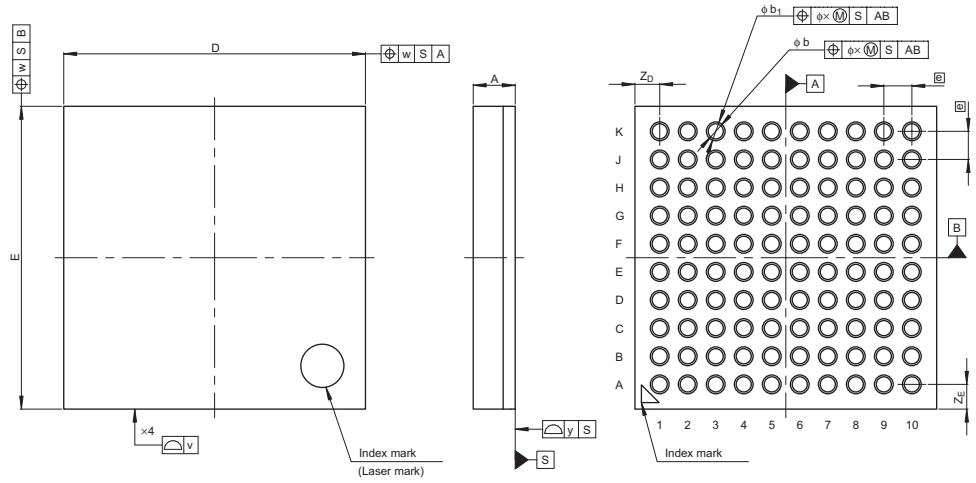

Reference Symbol	Dimension in Millimeters		
	Min	Nom	Max
D	—	7.0	—
E	—	7.0	—
v	—	—	0.15
w	—	—	0.20
A	—	—	1.05
e	—	0.65	—
b	0.31	0.35	0.39
b_1	0.385	0.435	0.485
x	—	—	0.08
y	—	—	0.10
Z_D	—	0.575	—
Z_E	—	0.575	—

Figure 1.1 100-pin LGA

JEITA Package Code	RENESAS Code	Previous Code	MASS (Typ) [g]
P-LFQFP100-14x14-0.50	PLQP0100KB-B	—	0.6

Unit: mm

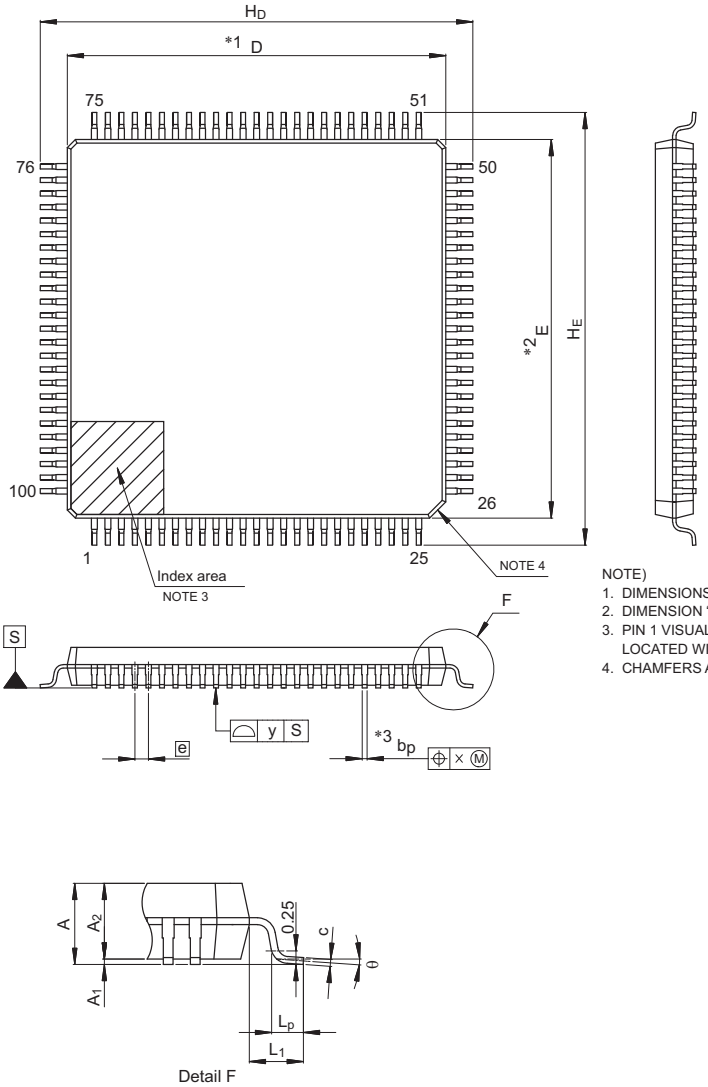

NOTE)
1. DIMENSIONS "*1" AND "*2" DO NOT INCLUDE MOLD FLASH.
2. DIMENSION "*3" DOES NOT INCLUDE TRIM OFFSET.
3. PIN 1 VISUAL INDEX FEATURE MAY VARY, BUT MUST BE LOCATED WITHIN THE HATCHED AREA.
4. CHAMFERS AT CORNERS ARE OPTIONAL, SIZE MAY VARY.

Reference Symbol	Dimensions in millimeters		
	Min	Nom	Max
D	13.9	14.0	14.1
E	13.9	14.0	14.1
A_2	—	1.4	—
H_D	15.8	16.0	16.2
H_E	15.8	16.0	16.2
A	—	—	1.7
A_1	0.05	—	0.15
b_p	0.15	0.20	0.27
c	0.09	—	0.20
θ	0°	3.5°	8°
e	—	0.5	—
x	—	—	0.08
y	—	—	0.08
L_p	0.45	0.6	0.75
L_1	—	1.0	—

© 2015 Renesas Electronics Corporation. All rights reserved.

Figure 1.2 100-pin LQFP

JEITA Package Code	RENESAS Code	Previous Code	MASS (Typ) [g]
P-LFQFP64-10x10-0.50	PLQP0064KB-C	—	0.3

Unit: mm

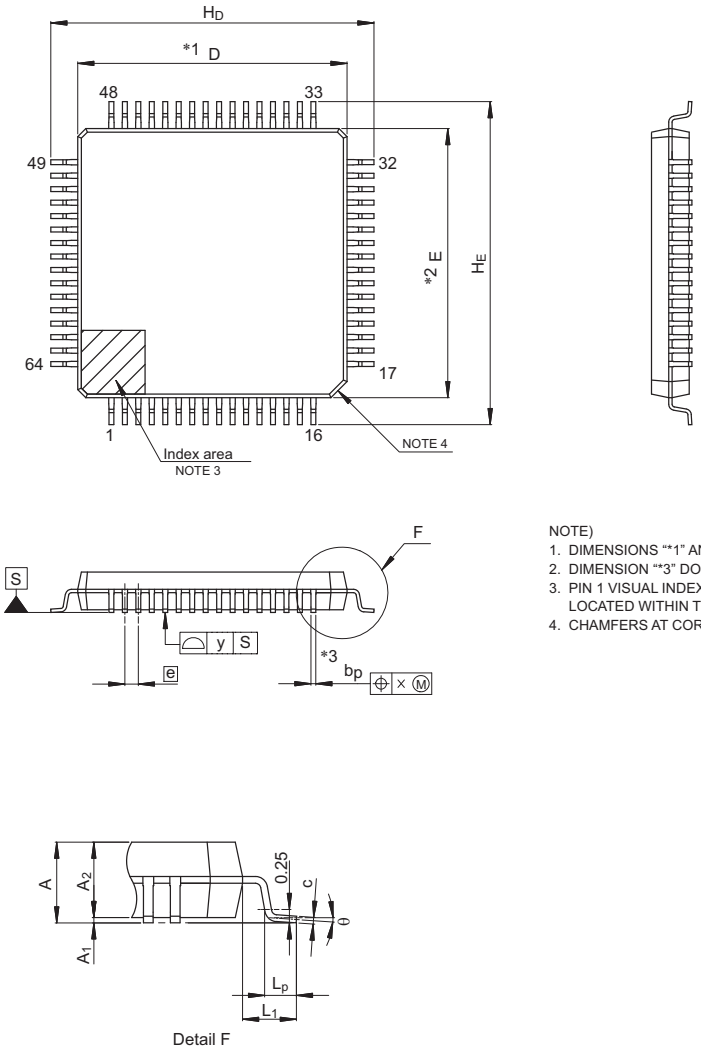

NOTE)
1. DIMENSIONS "*1" AND "*2" DO NOT INCLUDE MOLD FLASH.
2. DIMENSION "*3" DOES NOT INCLUDE TRIM OFFSET.
3. PIN 1 VISUAL INDEX FEATURE MAY VARY, BUT MUST BE LOCATED WITHIN THE HATCHED AREA.
4. CHAMFERS AT CORNERS ARE OPTIONAL, SIZE MAY VARY.

Reference Symbol	Dimensions in millimeters		
	Min	Nom	Max
D	9.9	10.0	10.1
E	9.9	10.0	10.1
A_2	—	1.4	—
H_D	11.8	12.0	12.2
H_E	11.8	12.0	12.2
A	—	—	1.7
A_1	0.05	—	0.15
b_p	0.15	0.20	0.27
c	0.09	—	0.20
θ	0°	3.5°	8°
e	—	0.5	—
x	—	—	0.08
y	—	—	0.08
L_p	0.45	0.6	0.75
L_1	—	1.0	—

© 2015 Renesas Electronics Corporation. All rights reserved.

Figure 1.3 64-pin LQFP

JEITA Package code	RENESAS code	Previous code	MASS(TYP.)[g]
P-HWQFN64-8x8-0.40	PWQN0064LA-A	P64K8-40-9B5-3	0.16

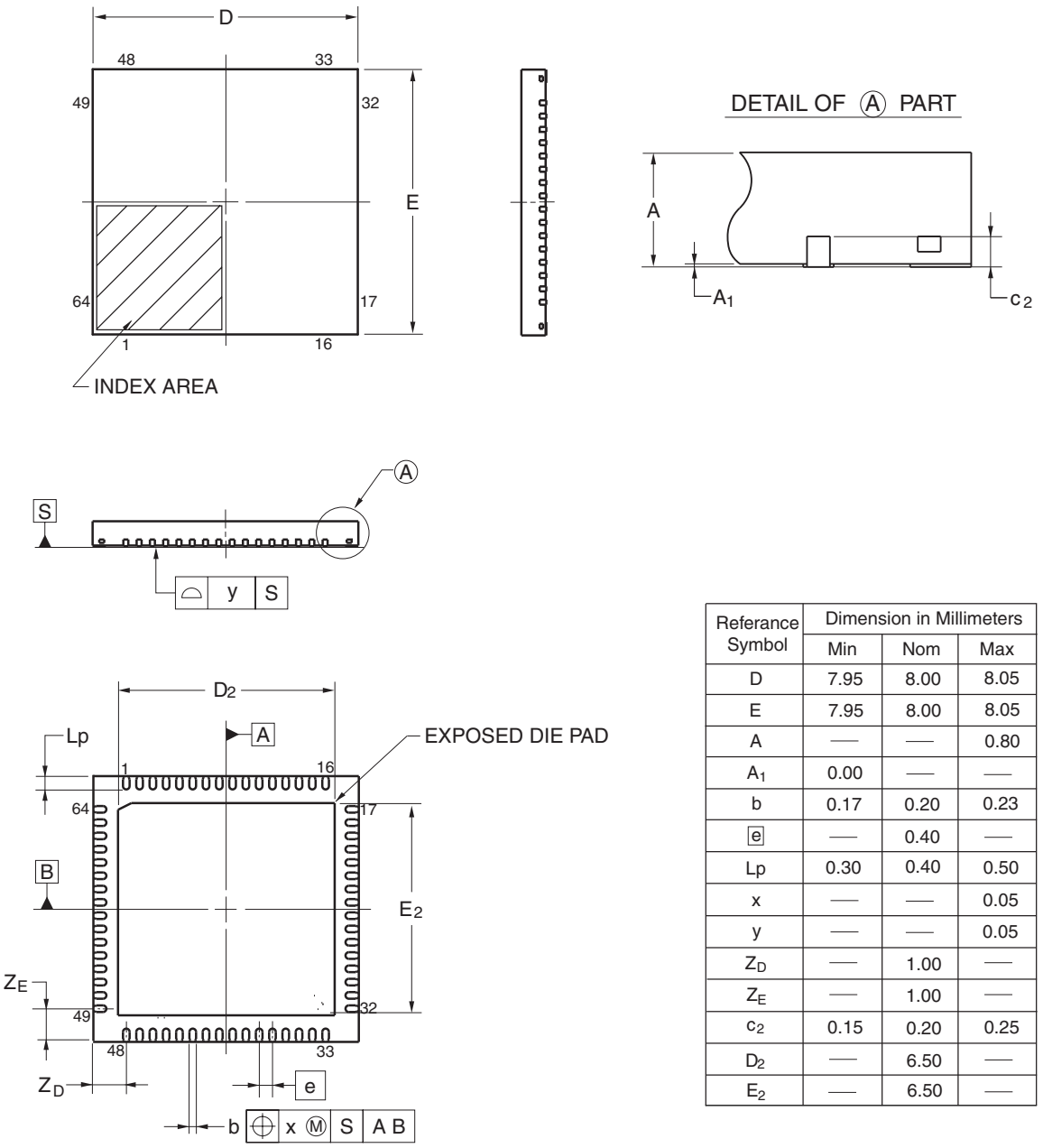

Referance Symbol	Dimension in Millimeters		
	Min	Nom	Max
D	7.95	8.00	8.05
E	7.95	8.00	8.05
A	—	—	0.80
A_1	0.00	—	—
b	0.17	0.20	0.23
e	—	0.40	—
Lp	0.30	0.40	0.50
x	—	—	0.05
y	—	—	0.05
Z_D	—	1.00	—
Z_E	—	1.00	—
c_2	0.15	0.20	0.25
D_2	—	6.50	—
E_2	—	6.50	—

©2013 Renesas Electronics Corporation. All rights reserved.

Figure 1.4 64-pin QFN

JEITA Package Code	RENESAS Code	Previous Code	MASS (Typ) [g]
P-LFQFP48-7x7-0.50	PLQP0048KB-B	—	0.2

Unit: mm

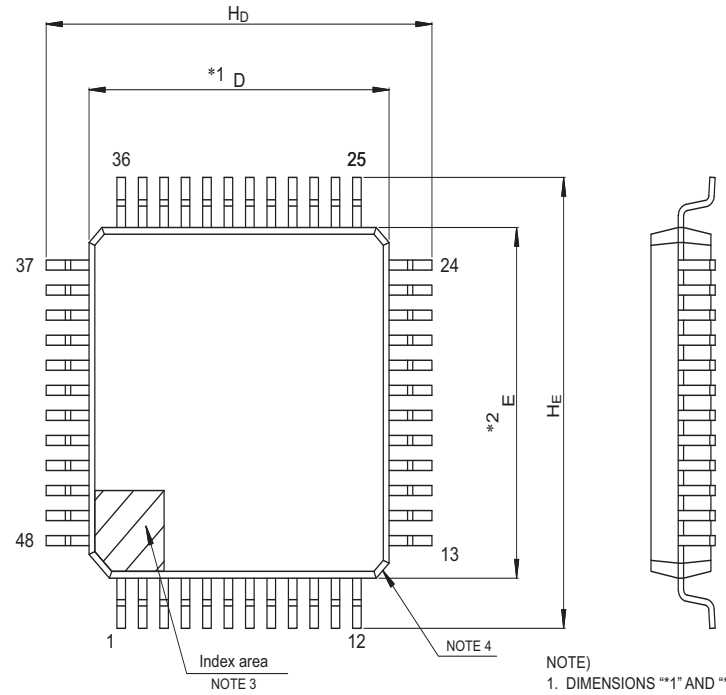

NOTE)
1. DIMENSIONS "*1" AND "*2" DO NOT INCLUDE MOLD FLASH.
2. DIMENSION "*3" DOES NOT INCLUDE TRIM OFFSET.
3. PIN 1 VISUAL INDEX FEATURE MAY VARY, BUT MUST BE LOCATED WITHIN THE HATCHED AREA.
4. CHAMFERS AT CORNERS ARE OPTIONAL, SIZE MAY VARY.

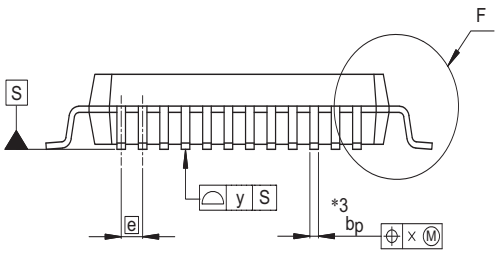

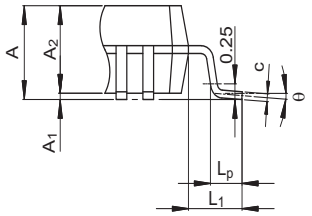

Detail F

Reference Symbol	Dimensions in millimeters		
	Min	Nom	Max
D	6.9	7.0	7.1
E	6.9	7.0	7.1
A_2	—	1.4	—
H_D	8.8	9.0	9.2
H_E	8.8	9.0	9.2
A	—	—	1.7
A_1	0.05	—	0.15
b_p	0.17	0.20	0.27
c	0.09	—	0.20
θ	0°	3.5°	8°
e	—	0.5	—
x	—	—	0.08
y	—	—	0.08
L_p	0.45	0.6	0.75
L_1	—	1.0	—

Figure 1.5 48-pin LQFP

JEITA Package code	RENESAS code	Previous code	MASS(TYP.)[g]
P-HWQFN48-7x7-0.50	PWQN0048KB-A	48PJN-A P48K8-50-5B4-6	0.13

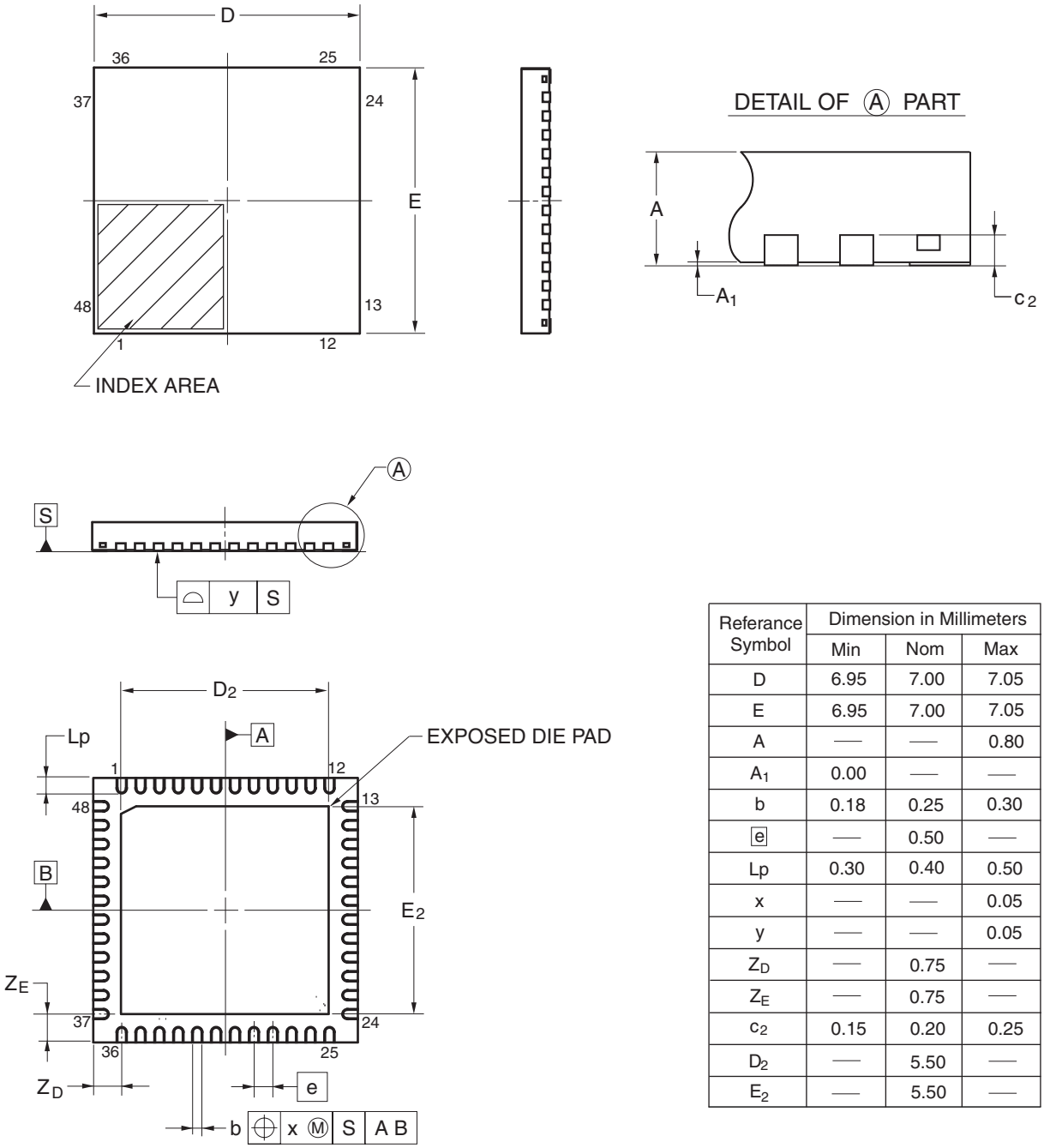

Referance Symbol	Dimension in Millimeters		
	Min	Nom	Max
D	6.95	7.00	7.05
E	6.95	7.00	7.05
A	—	—	0.80
A_1	0.00	—	—
b	0.18	0.25	0.30
e	—	0.50	—
Lp	0.30	0.40	0.50
x	—	—	0.05
y	—	—	0.05
Z_D	—	0.75	—
Z_E	—	0.75	—
c_2	0.15	0.20	0.25
D_2	—	5.50	—
E_2	—	5.50	—

©2013 Renesas Electronics Corporation. All rights reserved.

Figure 1.6 48-pin QFN

JEITA Package code	RENESAS code	Previous code	MASS(TYP.)[g]
P-HWQFN40-6x6-0.50	PWQN0040KC-A	P40K8-50-4B4-5	0.09

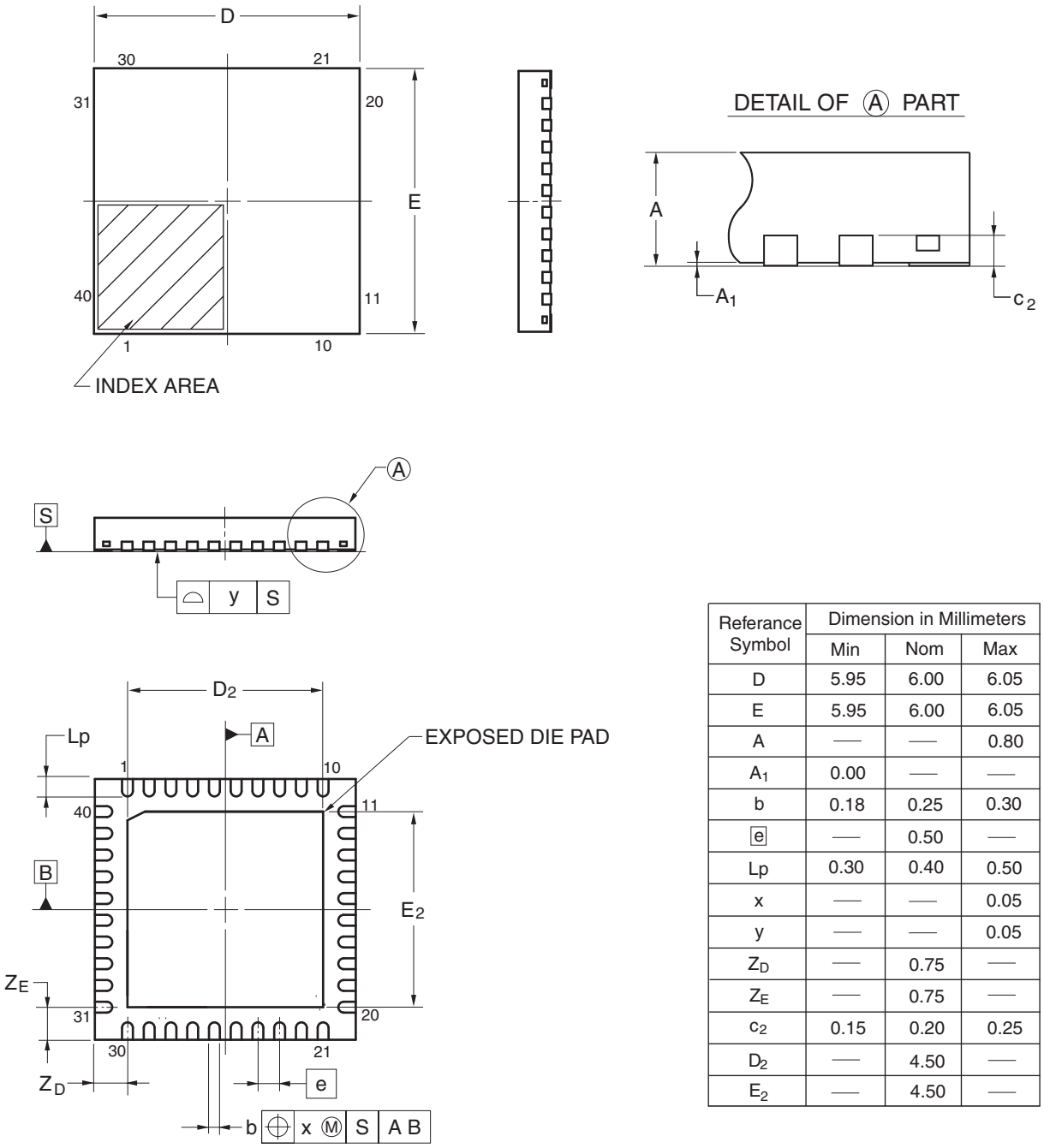

Referance Symbol	Dimension in Millimeters		
	Min	Nom	Max
D	5.95	6.00	6.05
E	5.95	6.00	6.05
A	—	—	0.80
A_1	0.00	—	—
b	0.18	0.25	0.30
e	—	0.50	—
Lp	0.30	0.40	0.50
x	—	—	0.05
y	—	—	0.05
Z_D	—	0.75	—
Z_E	—	0.75	—
c_2	0.15	0.20	0.25
D_2	—	4.50	—
E_2	—	4.50	—

Figure 1.7 40-pin QFN

Revision History	S3A6 Microcontroller Group Datasheet

Rev.	Date	Summary
1.00	Apr 4, 2017	First release
1.10	Jun 25, 2018	Second release
1.20	Aug 30, 2019	Third release

Website and Support

Visit the following vanity URLs to learn about key elements of the Synergy Platform, download components and related documentation, and get support.

Synergy Software	www.renesas.com/synergy/software
Synergy Software Package	www.renesas.com/synergy/ssp
Software add-ons	www.renesas.com/synergy/addons
Software glossary	www.renesas.com/synergy/softwareglossary
Development tools	www.renesas.com/synergy/tools
Synergy Hardware	www.renesas.com/synergy/hardware
Microcontrollers	www.renesas.com/synergy/mcus
MCU glossary	www.renesas.com/synergy/mcuglossary
Parametric search	www.renesas.com/synergy/parametric
Kits	www.renesas.com/synergy/kits
Synergy Solutions Gallery	www.renesas.com/synergy/solutionsgallery
Partner projects	www.renesas.com/synergy/partnerprojects
Application projects	www.renesas.com/synergy/applicationprojects
Self-service support resources:	
Documentation	www.renesas.com/synergy/docs
Knowledgebase	www.renesas.com/synergy/knowledgebase
Forums	www.renesas.com/synergy/forum
Training	www.renesas.com/synergy/training
Videos	www.renesas.com/synergy/videos
Chat and web ticket	www.renesas.com/synergy/resourcelibrary

Proprietary Notice

All text, graphics, photographs, trademarks, logos, artwork and computer code, collectively known as content, contained in this document is owned, controlled or licensed by or to Renesas, and is protected by trade dress, copyright, patent and trademark laws, and other intellectual property rights and unfair competition laws. Except as expressly provided herein, no part of this document or content may be copied, reproduced, republished, posted, publicly displayed, encoded, translated, transmitted or distributed in any other medium for publication or distribution or for any commercial enterprise, without prior written consent from Renesas.

Arm® and Cortex® are registered trademarks of Arm Limited. CoreSight™ is a trademark of Arm Limited.

CoreMark® is a registered trademark of the Embedded Microprocessor Benchmark Consortium.

Magic Packet™ is a trademark of Advanced Micro Devices, Inc.

SuperFlash® is a registered trademark of Silicon Storage Technology, Inc. in several countries including the United States and Japan.

Other brands and names mentioned in this document may be the trademarks or registered trademarks of their respective holders.

S3A6 Microcontroller Group Datasheet

Publication Date: Rev.1.20 Aug 30, 2019

Published by: Renesas Electronics Corporation

General Precautions

1. Precaution against Electrostatic Discharge (ESD)

   A strong electrical field, when exposed to a CMOS device, can cause destruction of the gate oxide and ultimately degrade the device operation. Steps must be taken to stop the generation of static electricity as much as possible, and quickly dissipate it when it occurs. Environmental control must be adequate. When it is dry, a humidifier should be used. This is recommended to avoid using insulators that can easily build up static electricity. Semiconductor devices must be stored and transported in an anti-static container, static shielding bag or conductive material. All test and measurement tools including work benches and floors must be grounded. The operator must also be grounded using a wrist strap. Semiconductor devices must not be touched with bare hands. Similar precautions must be taken for printed circuit boards with mounted semiconductor devices.

2. Processing at power-on

   The state of the product is undefined at the time when power is supplied. The states of internal circuits in the LSI are indeterminate and the states of register settings and pins are undefined at the time when power is supplied. In a finished product where the reset signal is applied to the external reset pin, the states of pins are not guaranteed from the time when power is supplied until the reset process is completed. In a similar way, the states of pins in a product that is reset by an on-chip power-on reset function are not guaranteed from the time when power is supplied until the power reaches the level at which resetting is specified.

3. Input of signal during power-off state

   Do not input signals or an I/O pull-up power supply while the device is powered off. The current injection that results from input of such a signal or I/O pull-up power supply may cause malfunction and the abnormal current that passes in the device at this time may cause degradation of internal elements. Follow the guideline for input signal during power-off state as described in your product documentation.

4. Handling of unused pins

   Handle unused pins in accordance with the directions given under handling of unused pins in the manual. The input pins of CMOS products are generally in the high-impedance state. In operation with an unused pin in the open-circuit state, extra electromagnetic noise is induced in the vicinity of the LSI, an associated shoot-through current flows internally, and malfunctions occur due to the false recognition of the pin state as an input signal become possible.

5. Clock signals

   After applying a reset, only release the reset line after the operating clock signal becomes stable. When switching the clock signal during program execution, wait until the target clock signal is stabilized. When the clock signal is generated with an external resonator or from an external oscillator during a reset, ensure that the reset line is only released after full stabilization of the clock signal. Additionally, when switching to a clock signal produced with an external resonator or by an external oscillator while program execution is in progress, wait until the target clock signal is stable.

6. Voltage application waveform at input pin

   Waveform distortion due to input noise or a reflected wave may cause malfunction. If the input of the CMOS device stays in the area between V_{IL} (Max.) and V_{IH} (Min.) due to noise, for example, the device may malfunction. Take care to prevent chattering noise from entering the device when the input level is fixed, and also in the transition period when the input level passes through the area between V_{IL} (Max.) and V_{IH} (Min.).

7. Prohibition of access to reserved addresses

   Access to reserved addresses is prohibited. The reserved addresses are provided for possible future expansion of functions. Do not access these addresses as the correct operation of the LSI is not guaranteed.

8. Differences between products

   Before changing from one product to another, for example to a product with a different part number, confirm that the change will not lead to problems. The characteristics of a microprocessing unit or microcontroller unit products in the same group but having a different part number might differ in terms of internal memory capacity, layout pattern, and other factors, which can affect the ranges of electrical characteristics, such as characteristic values, operating margins, immunity to noise, and amount of radiated noise. When changing to a product with a different part number, implement a system-evaluation test for the given product.

Notice

1. Descriptions of circuits, software and other related information in this document are provided only to illustrate the operation of semiconductor products and application examples. You are fully responsible for the incorporation or any other use of the circuits, software, and information in the design of your product or system. Renesas Electronics disclaims any and all liability for any losses and damages incurred by you or third parties arising from the use of these circuits, software, or information.
2. Renesas Electronics hereby expressly disclaims any warranties against and liability for infringement or any other claims involving patents, copyrights, or other intellectual property rights of third parties, by or arising from the use of Renesas Electronics products or technical information described in this document, including but not limited to, the product data, drawings, charts, programs, algorithms, and application examples.
3. No license, express, implied or otherwise, is granted hereby under any patents, copyrights or other intellectual property rights of Renesas Electronics or others.
4. You shall not alter, modify, copy, or reverse engineer any Renesas Electronics product, whether in whole or in part. Renesas Electronics disclaims any and all liability for any losses or damages incurred by you or third parties arising from such alteration, modification, copying or reverse engineering.
5. Renesas Electronics products are classified according to the following two quality grades: “Standard” and “High Quality”. The intended applications for each Renesas Electronics product depends on the product’s quality grade, as indicated below.
   "Standard": Computers; office equipment; communications equipment; test and measurement equipment; audio and visual equipment; home electronic appliances; machine tools; personal electronic equipment; industrial robots; etc.
   "High Quality": Transportation equipment (automobiles, trains, ships, etc.); traffic control (traffic lights); large-scale communication equipment; key financial terminal systems; safety control equipment; etc.
   Unless expressly designated as a high reliability product or a product for harsh environments in a Renesas Electronics data sheet or other Renesas Electronics document, Renesas Electronics products are not intended or authorized for use in products or systems that may pose a direct threat to human life or bodily injury (artificial life support devices or systems; surgical implantations; etc.), or may cause serious property damage (space system; undersea repeaters; nuclear power control systems; aircraft control systems; key plant systems; military equipment; etc.). Renesas Electronics disclaims any and all liability for any damages or losses incurred by you or any third parties arising from the use of any Renesas Electronics product that is inconsistent with any Renesas Electronics data sheet, user’s manual or other Renesas Electronics document.
6. When using Renesas Electronics products, refer to the latest product information (data sheets, user’s manuals, application notes, “General Notes for Handling and Using Semiconductor Devices” in the reliability handbook, etc.), and ensure that usage conditions are within the ranges specified by Renesas Electronics with respect to maximum ratings, operating power supply voltage range, heat dissipation characteristics, installation, etc. Renesas Electronics disclaims any and all liability for any malfunctions, failure or accident arising out of the use of Renesas Electronics products outside of such specified ranges.
7. Although Renesas Electronics endeavors to improve the quality and reliability of Renesas Electronics products, semiconductor products have specific characteristics, such as the occurrence of failure at a certain rate and malfunctions under certain use conditions. Unless designated as a high reliability product or a product for harsh environments in a Renesas Electronics data sheet or other Renesas Electronics document, Renesas Electronics products are not subject to radiation resistance design. You are responsible for implementing safety measures to guard against the possibility of bodily injury, injury or damage caused by fire, and/or danger to the public in the event of a failure or malfunction of Renesas Electronics products, such as safety design for hardware and software, including but not limited to redundancy, fire control and malfunction prevention, appropriate treatment for aging degradation or any other appropriate measures. Because the evaluation of microcomputer software alone is very difficult and impractical, you are responsible for evaluating the safety of the final products or systems manufactured by you.
8. Please contact a Renesas Electronics sales office for details as to environmental matters such as the environmental compatibility of each Renesas Electronics product. You are responsible for carefully and sufficiently investigating applicable laws and regulations that regulate the inclusion or use of controlled substances, including without limitation, the EU RoHS Directive, and using Renesas Electronics products in compliance with all these applicable laws and regulations. Renesas Electronics disclaims any and all liability for damages or losses occurring as a result of your noncompliance with applicable laws and regulations.
9. Renesas Electronics products and technologies shall not be used for or incorporated into any products or systems whose manufacture, use, or sale is prohibited under any applicable domestic or foreign laws or regulations. You shall comply with any applicable export control laws and regulations promulgated and administered by the governments of any countries asserting jurisdiction over the parties or transactions.
10. It is the responsibility of the buyer or distributor of Renesas Electronics products, or any other party who distributes, disposes of, or otherwise sells or transfers the product to a third party, to notify such third party in advance of the contents and conditions set forth in this document.
11. This document shall not be reprinted, reproduced or duplicated in any form, in whole or in part, without prior written consent of Renesas Electronics.
12. Please contact a Renesas Electronics sales office if you have any questions regarding the information contained in this document or Renesas Electronics products.

(Note 1) “Renesas Electronics” as used in this document means Renesas Electronics Corporation and also includes its directly or indirectly controlled subsidiaries.

(Note 2) “Renesas Electronics product(s)” means any product developed or manufactured by or for Renesas Electronics.

(Rev.4.0-1 November 2017)

SALES OFFICES Renesas Electronics Corporation http://www.renesas.com

Refer to "http://www.renesas.com/" for the latest and detailed information.

Renesas Electronics Corporation
TOYOSU FORESIA, 3-2-24 Toyosu, Koto-ku, Tokyo 135-0061, Japan

Renesas Electronics America Inc.
1001 Murphy Ranch Road, Milpitas, CA 95035, U.S.A.
Tel: +1-408-432-8888, Fax: +1-408-434-5351

Renesas Electronics Canada Limited
9251 Yonge Street, Suite 8309 Richmond Hill, Ontario Canada L4C 9T3
Tel: +1-905-237-2004

Renesas Electronics Europe GmbH
Arcadiastrasse 10, 40472 Düsseldorf, Germany
Tel: +49-211-6503-0, Fax: +49-211-6503-1327

Renesas Electronics (China) Co., Ltd.
Room 101-T01, Floor 1, Building 7, Yard No. 7, 8th Street, Shangdi, Haidian District, Beijing 100085, China
Tel: +86-10-8235-1155, Fax: +86-10-8235-7679

Renesas Electronics (Shanghai) Co., Ltd.
Unit 301, Tower A, Central Towers, 555 Langao Road, Putuo District, Shanghai 200333, China
Tel: +86-21-2226-0888, Fax: +86-21-2226-0999

Renesas Electronics Hong Kong Limited
Unit 1601-1611, 16/F., Tower 2, Grand Century Place, 193 Prince Edward Road West, Mongkok, Kowloon, Hong Kong
Tel: +852-2265-6688, Fax: +852 2886-9022

Renesas Electronics Taiwan Co., Ltd.
13F, No. 363, Fu Shing North Road, Taipei 10543, Taiwan
Tel: +886-2-8175-9600, Fax: +886 2-8175-9670

Renesas Electronics Singapore Pte. Ltd.
80 Bendemeer Road, Unit #06-02 Hyflux Innovation Centre, Singapore 339949
Tel: +65-6213-0200, Fax: +65-6213-0300

Renesas Electronics Malaysia Sdn.Bhd.
Unit No 3A-1 Level 3A Tower 8 UOA Business Park, No 1 Jalan Pengaturcara U1/51A, Seksyen U1, 40150 Shah Alam, Selangor, Malaysia
Tel: +60-3-5022-1288, Fax: +60-3-5022-1290

Renesas Electronics India Pvt. Ltd.
No.777C, 100 Feet Road, HAL 2nd Stage, Indiranagar, Bangalore 560 038, India
Tel: +91-80-67208700

Renesas Electronics Korea Co., Ltd.
17F, KAMCO Yangjae Tower, 262, Gangnam-daero, Gangnam-gu, Seoul, 06265 Korea
Tel: +82-2-558-3737, Fax: +82-2-558-5338

© 2019 Renesas Electronics Corporation. All rights reserved.

Colophon 8.0

Renesas Synergy™ Platform
S3A6 Microcontroller Group

Renesas Electronics Corporation

R01DS0308EU0120

Mouser Electronics

Authorized Distributor

Click to View Pricing, Inventory, Delivery & Lifecycle Information:

Renesas Electronics:
R7FS3A6783A01CNB#BA0 R7FS3A6783A01CNB#AA0 R7FS3A6783A01CNE#BA0 R7FS3A6783A01CNF#AA0 R7FS3A6783A01CNE#AA0 R7FS3A6783A01CNF#BA0